HANDLEBAR KIT

P/N 2882919-XXX, 2882920, 2882921, 2882922, 2882923, 2883297-XXX

IMPORTANT

Due to the technical nature of this kit, Indian® insists that this installation be performed by a certified Indian Motorcycle® Technician.

APPLICATION

Verify accessory fitment at **www.indianmotorcycle.com**.

BEFORE YOU BEGIN

Read these instructions and check to be sure all parts and tools are accounted for. Please retain these installation instructions for future reference and parts ordering information.

KIT CONTENTS

Full installation of this kit will require one of the following additional parts (sold separately):

- Heated Grip Kit PN: 2883442
- Non-Heated Grip Kit PN: 2883441
- Accessory Grip Kit (If accessory grip installed) PN: Various

Full installation of this kit will require the following additional part (sold separately):

- Adhesive Kit PN: 2883462

Kit PN 2882923-XXX shown; Other kits similar except as noted below.

This Kit includes:

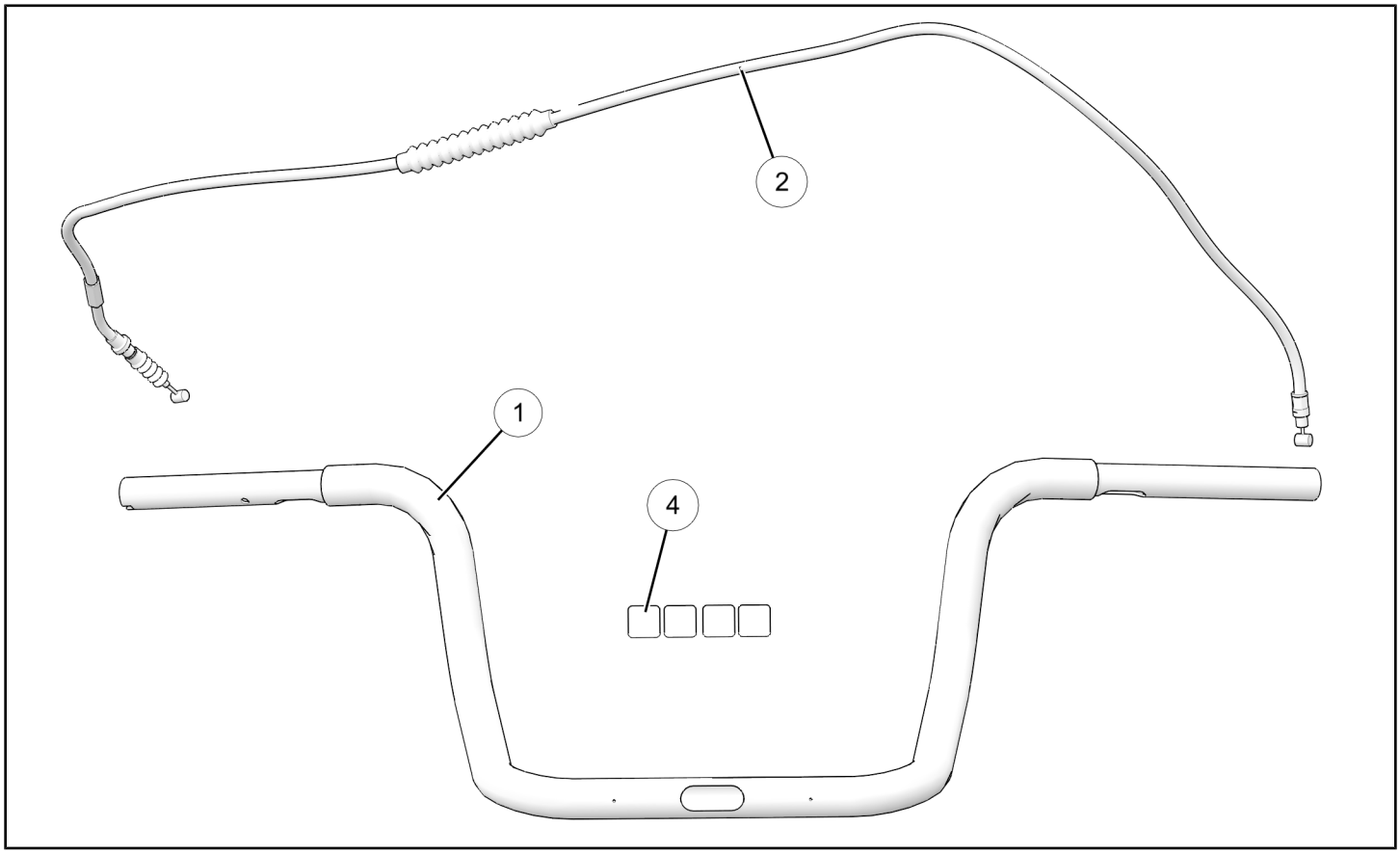

REF	QTY	PART DESCRIPTION	PART NUMBER
1	1	Handlebar, Cruiser Beach, Polished Stainless Steel (Kit PN 2882921-410) Handlebar, Cruiser Beach, Gloss Black (Kit PN 2883448-266) Handlebar, Cruiser Mid-Ape, Polished Stainless Steel (Kit PN 2882920-410) Handlebar, Cruiser Mid-Ape, Gloss Black (Kit PN 2883449-266) Handlebar, Cruiser Pullback, Polished Stainless Steel (Kit PN 2882919-410) Handlebar, Touring Mid-Rise, Polished Stainless Steel (Kit PN 2882923-410) Handlebar, Touring Mid Rise, Gloss Black (Kit PN 2883450-266) Handlebar, Touring Pullback, Polished Stainless Steel (Kit PN 2882922-410) Handlebar, Springfield, Buckhorn, Chrome (Kit PN 2883297-156) Handlebar, Springfield, Buckhorn, Gloss Black (Kit PN 2883297-266)	- - - - - - - - - -
2	1	Cable, Clutch (Only in Kit PN 2882923-410, 2883450-266, 2882920-410, 2883449-266)	7082079
3	2	Cable Tie, Black (Not Shown)	7081504
4	4	Film, Protection, Clear (Only in kits PN 2882923-410 & 2883450-266)	5814472
	1	Instructions	9928169

TOOLS REQUIRED

- Safety Glasses
- Camera, Digital (Recommended)
- Hammer, Soft Face (Optional)
- Hex Key Set, Metric
- Pick Tool Set
- Pliers, Side Cutting
- Screwdriver, Phillips
- Socket Set, Hex Bit, Metric
- Socket Set, Metric
- Socket Set, Torx® Bit
- Torque Wrench
- Wrench Set, Metric
- Vice, Bench (Optional)

CONSUMABLES REQUIRED

- Gloves, Chemical Resistant
- Multi-Purpose Grease (If replacing clutch cable)
- Solvent Wipe (99% Isopropyl Alcohol)
- Tape, Electrical

IMPORTANT

Your Indian Handlebar Kit is exclusively designed for your vehicle. Please read the installation instructions thoroughly before beginning. Installation is easier if the vehicle is clean and free of debris. For your safety, and to ensure a satisfactory installation, perform all installation steps correctly in the sequence shown.

ASSEMBLY TIME

- Without Clutch Cable: Approximately 60 minutes
- With Clutch Cable: Approximately 90 minutes

INSTALLATION INSTRUCTIONS

⚠ WARNING

Clutch cable must be routed, installed and adjusted correctly to function properly. Note how cable is route and secured before removing. Permanent cable damage may result if inner cable is bent or twisted during procedure. If cable is incorrectly routed, installed or adjusted, serious injury or death may occur.

IMPORTANT

Protect all finished surfaces during these operations.

1. Turn key or ignition switch to "OFF" position and remove key. If equipped with keyless fob, remove fob from proximity of vehicle.
2. Place motorcycle in an upright position on a flat level surface with front wheel secured in a wheel vise.

FRONT BODYWORK REMOVAL

FAIRING MODELS

1. Take photos of wire routing from a front view and a rear view for reference during re-assembly.
2. Remove and retain two screws Ⓐ from head light bezel Ⓑ. Pull firmly outward to remove head light bezel Ⓚ.

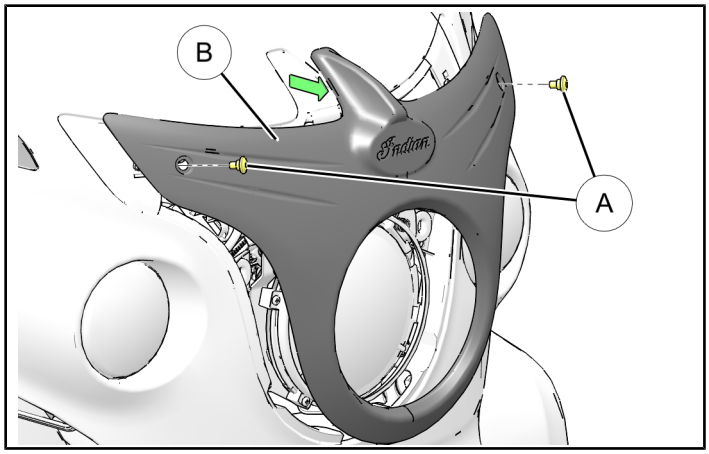

3. Remove and retain three fasteners Ⓒ and withdraw head light assembly Ⓓ far enough to disconnect electrical connector. Remove head light assembly and set aside.

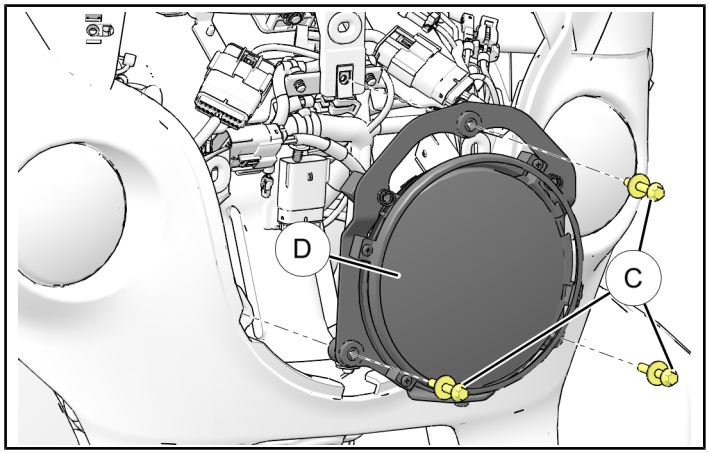

4. Unplug handlebar connector Ⓔ.

TIP

Tie a piece of string or wire to connector before pulling handlebar out of fairing to ease re-routing of harness during install.

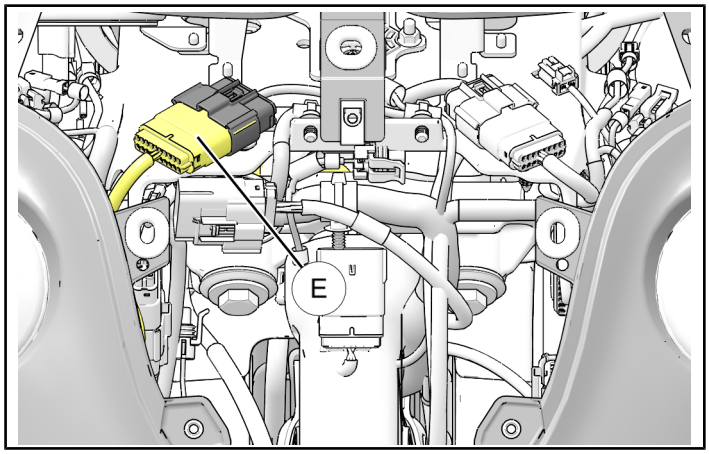

5. To make certain wiring is plugged into correct terminal during re-assembly, ensure wiring is labeled on both ends of each terminal. There are a total of seven terminals coming from handlebars (four right hand / three left hand).
6. Remove seat as per owner's manual.

7. Remove and retain rear console mounting screw Ⓕ.

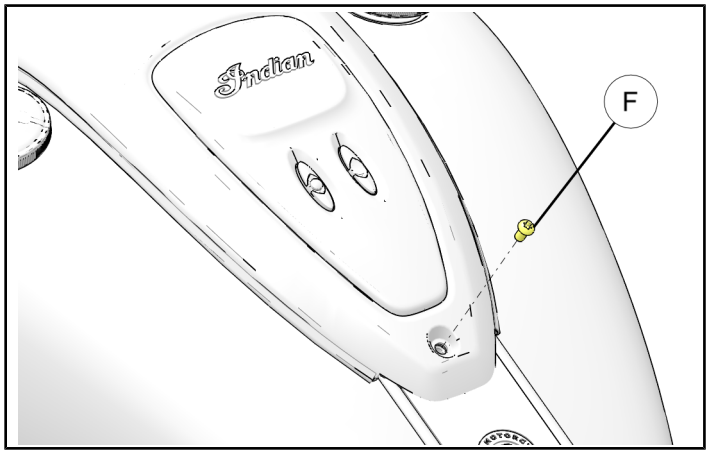

8. Turn handlebars and pull front of the console Ⓖforward to release it from grommet Ⓗ at front mounting location.

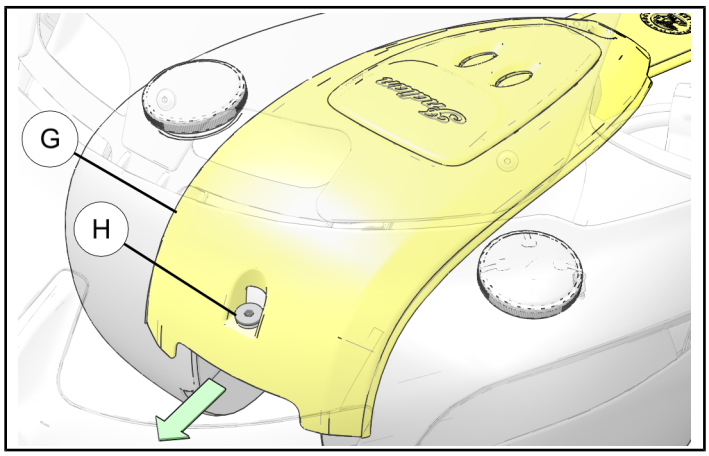

9. Unplug harnesses (switches). Remove back of leather strap Ⓙ from plastic retainer Ⓚ on fuel tank as if removing a shirt button. Remove console from motorcycle and place on a cloth to protect from damage.

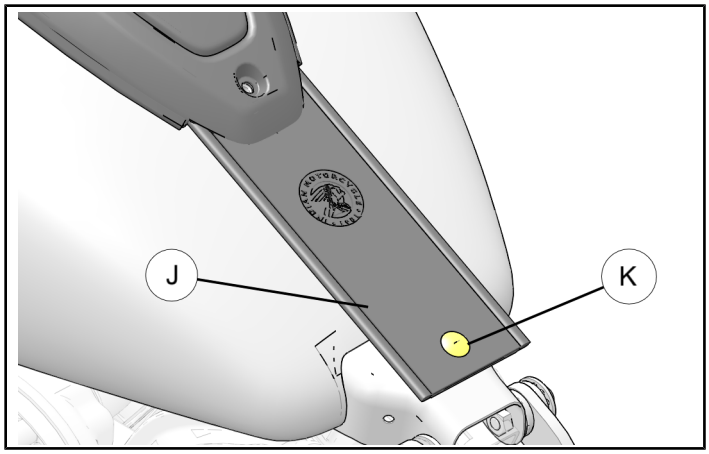

NON-FAIRING MODELS

1. Remove windshield assembly, if equipped.
2. Remove and retain two fasteners Ⓐ from top of nacelle assembly.

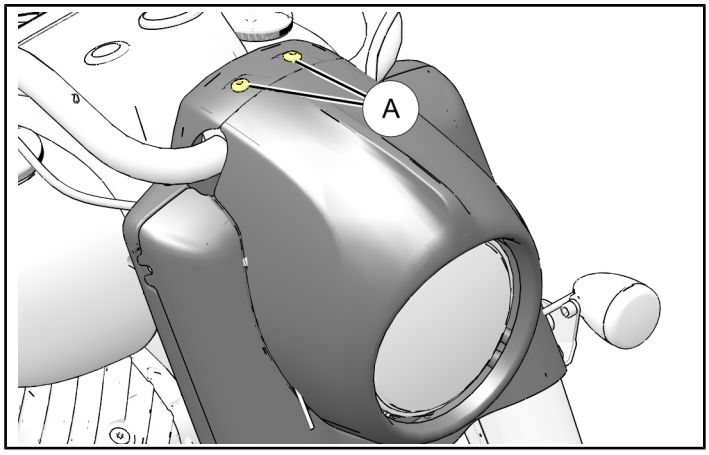

3. Remove and retain two fasteners Ⓑ from each side of nacelle assembly. Disconnect turn signals Ⓒ and light bar bracket (if installed-not shown) and set aside to prevent damage.

TIP
Photograph wire routing for assembly reference.

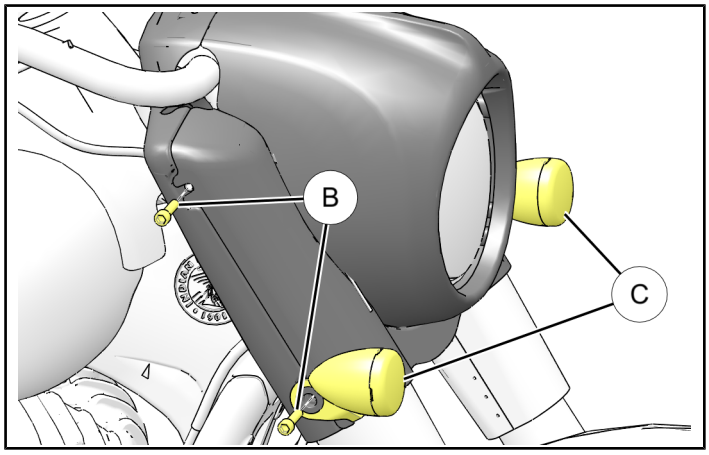

4. Rotate headlight bucket assembly Ⓓ forward and lower. Pull rear portion of nacelle assembly Ⓔ back to expose handlebar riser Ⓕ.

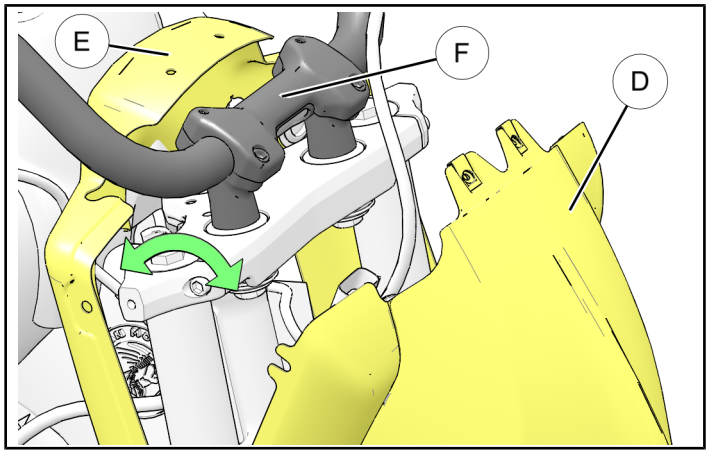

5. Loosen front handlebar clamp fasteners Ⓖ **(Do not remove screws)** and rotate handlebar up until rear portion of nacelle Ⓔ can be removed.

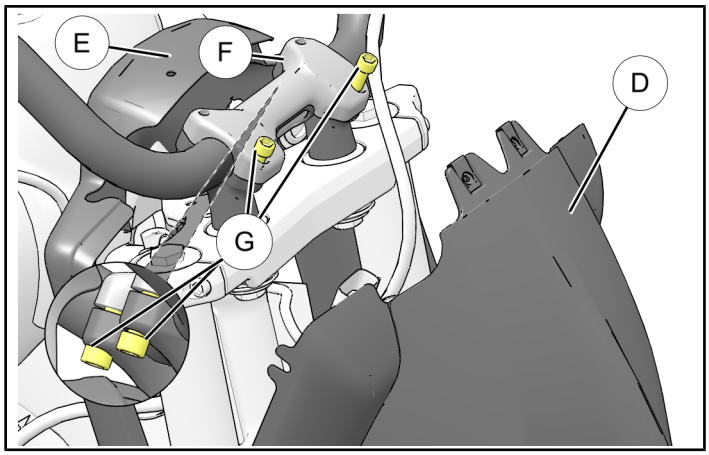

6. Disconnect auxiliary light switch (if equipped) and remove rear portion of nacelle.

HAND CONTROLS REMOVAL

RIGHT HAND CONTROLS REMOVAL

1. Starting with lower screw, remove and retain two screws Ⓐ and remove master cylinder assembly Ⓑ. Carefully hang master cylinder assembly so that it remains level.

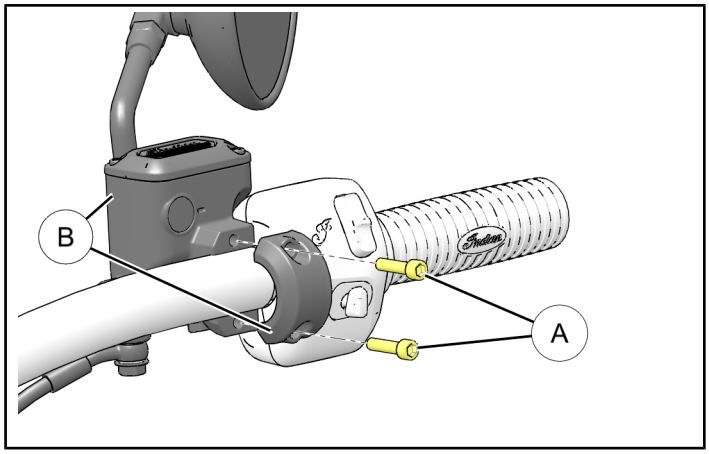

2. Remove and retain two screws Ⓒ from RH switch cube cover Ⓓ and separate halves of cover.

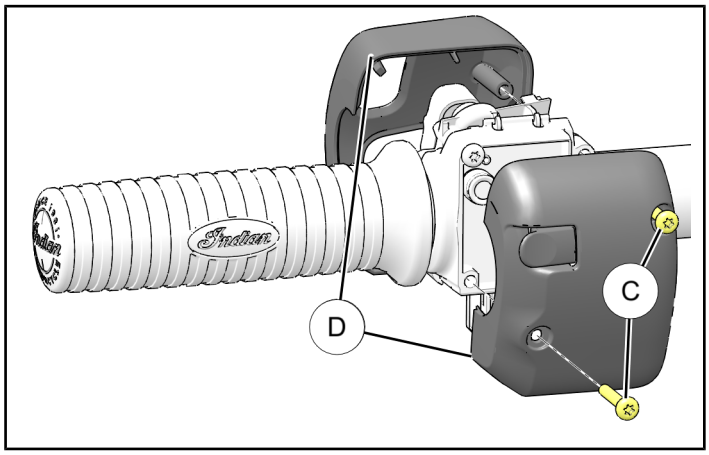

3. Remove and retain two screws Ⓔ from inner half of RH switch Ⓕ. Rotate switch side upward and remove entire assembly. Disconnect wire connectors from switch cube Ⓕ.

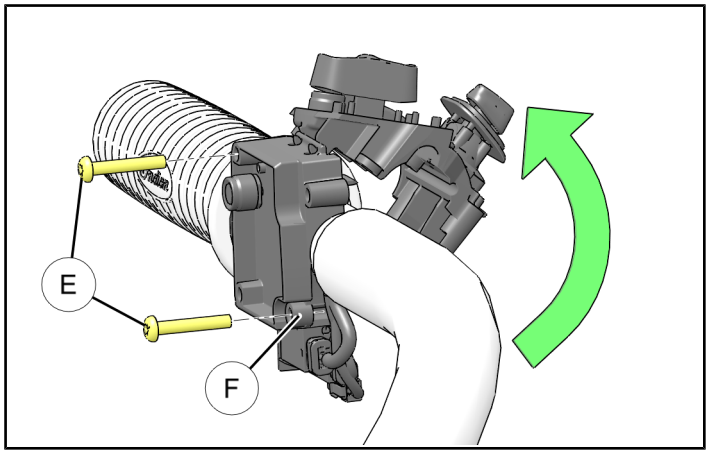

4. Slide RH throttle tube/grip from handlebar.

LEFT HAND CONTROLS REMOVAL

1. Loosen two screws Ⓖ. Slide and carefully rotate clutch handle assembly Ⓗ enough to gain access to screws Ⓙ on back of switch housing Ⓚ. Use extra caution with clutch handle wire.

IMPORTANT

Do Not over-rotate clutch handle assembly around handlebar or damage to clutch electrical wires will occur.

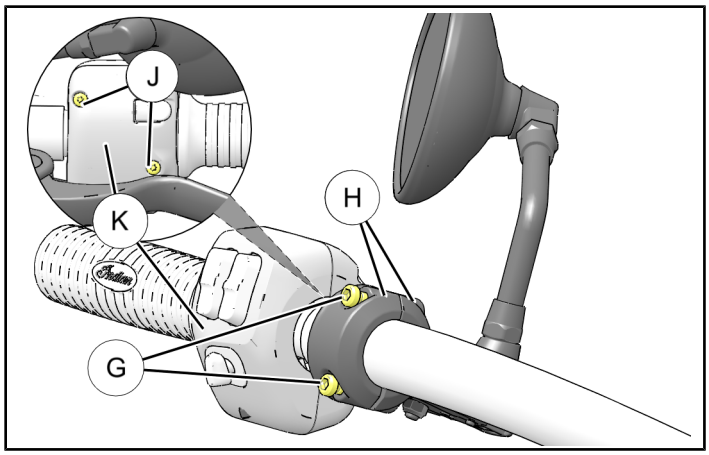

2. Remove and retain two screws Ⓙ from LH switch cube cover Ⓚ and separate halves of cover.

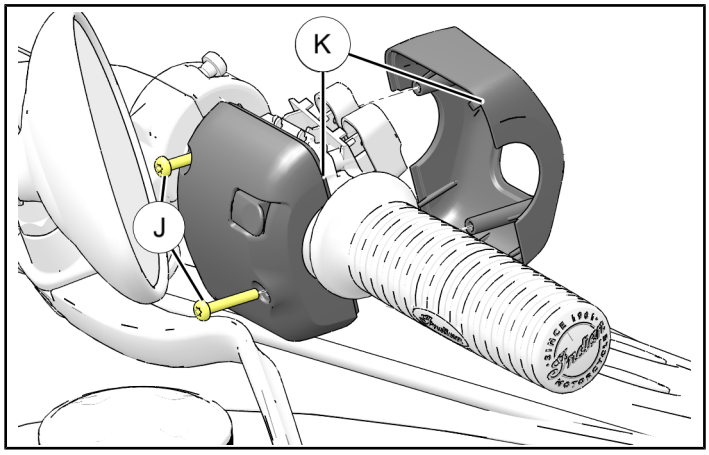

3. Unplug clutch switch connector Ⓛ from LH switch assembly Ⓜ by using a small pick to release retaining tab. Remove and retain two screws Ⓖ and clutch handle assembly Ⓗ. Remove clutch cable from handle and set clutch handle assembly aside.

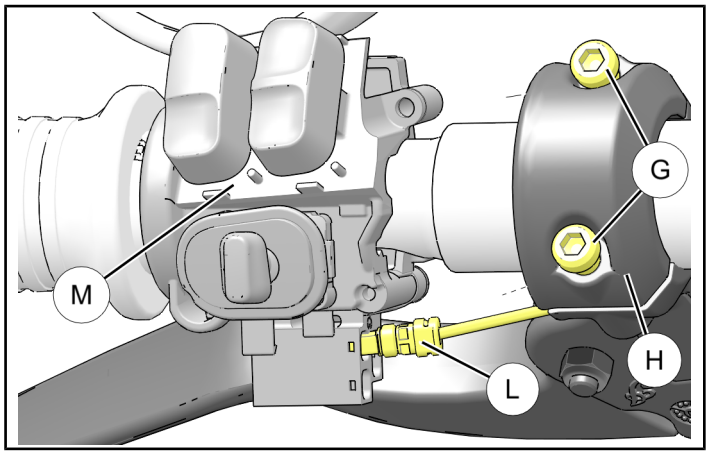

4. Remove and retain two screws Ⓝ from inner half of LH switch Ⓜ. Rotate switch side upward and remove entire assembly. Disconnect wires from switch cube Ⓜ.

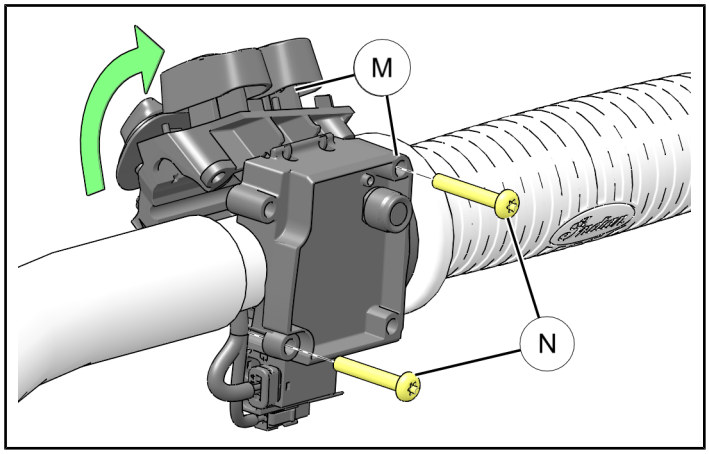

5. Remove grip by placing rubber strap wrench around LH grip Ⓟ and twisting grip to break adhesive free. Twist grip back and forth while pulling outward. Use a soft hammer if needed to move handle. Discard LH grip.

NOTE
Removal of LH grip will destroy grip and it should not be reused.

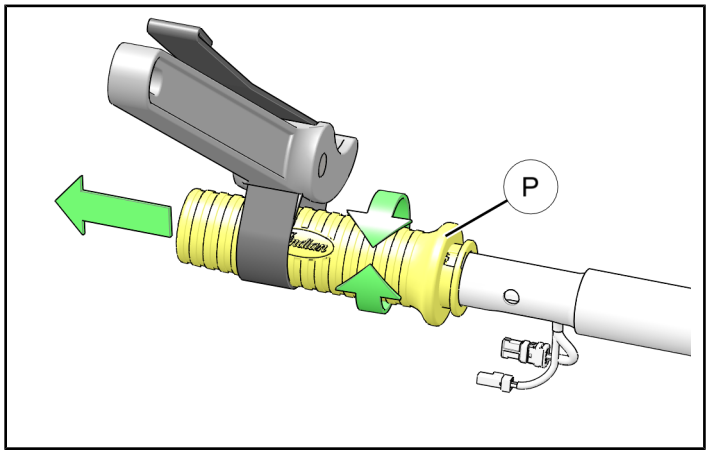

CLUTCH CABLE REMOVAL

If clutch cable not required, skip to "Handlebar Removal and Installation" section

1. Remove and retain side stand bumper bolt Ⓐ and clutch cable E-clip Ⓑ.

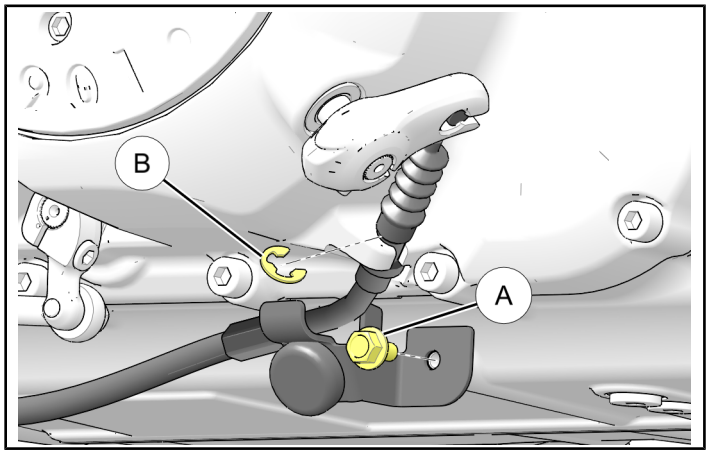

2. Protect clutch release arm Ⓒ with a shop towel. Rotate release arm inward. Disconnect clutch cable Ⓓ from release arm.

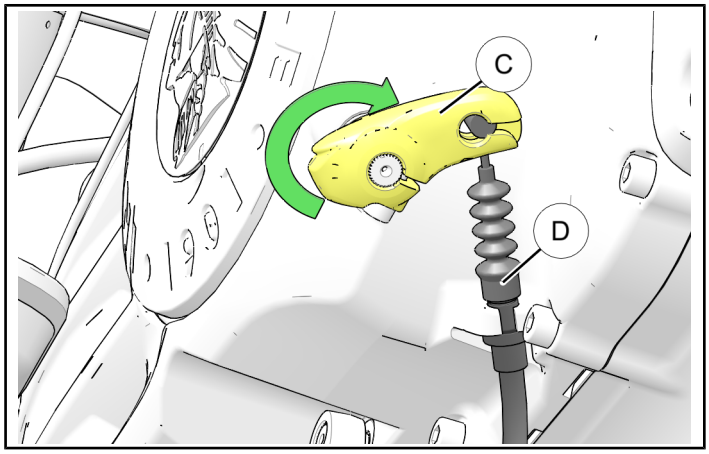

3. Withdraw clutch cable Ⓓ from mounting boss located on primary cover.

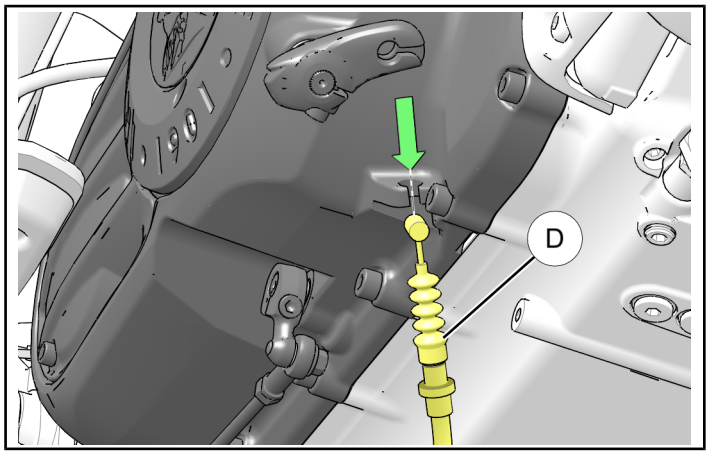

4. Note routing of clutch cable through frame.
5. Loosen, **but do not remove**, two screws Ⓔ, bolt Ⓕ and nut Ⓖ, screws Ⓗ and Ⓙsecuring LH frame downtube Ⓚ to engine and steering head. **Do not remove fasteners.**

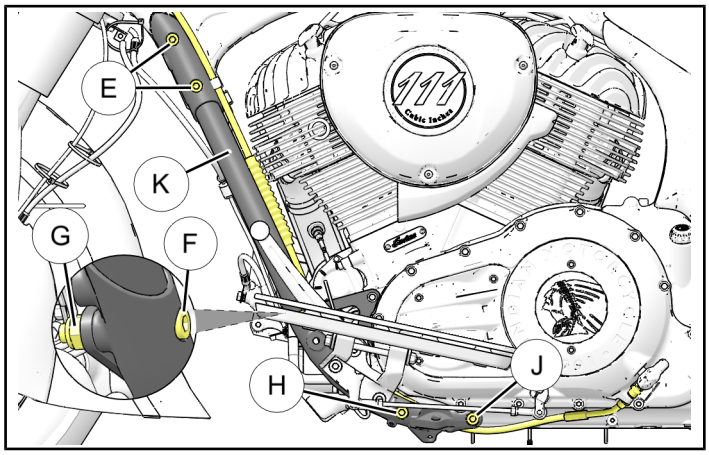

6. Remove and retain screw Ⓛ and P-clamp Ⓜ.

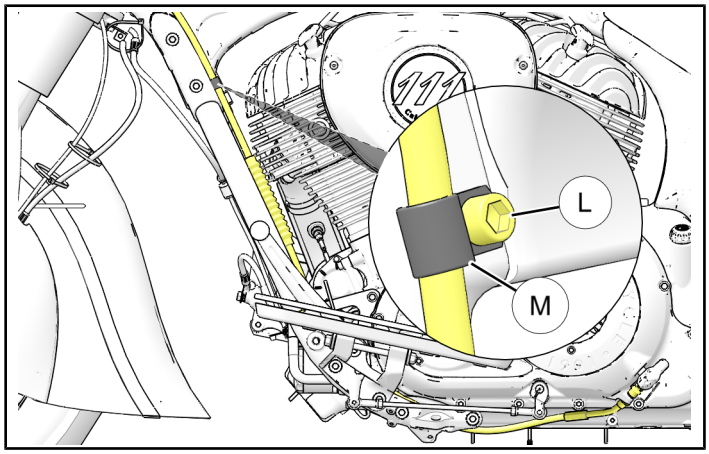

FAIRING MODELS

1. Turn handlebars fully right to access cable Ⓐ. Carefully pry cable Ⓐ from wire clip Ⓑ and remove cable.

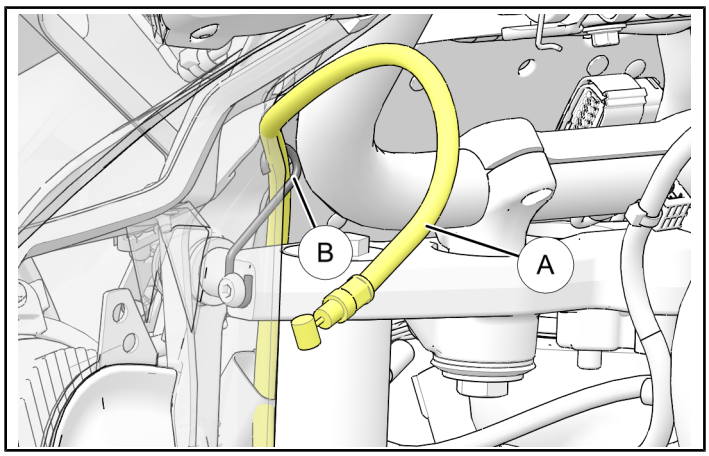

NON-FAIRING MODELS

1. Remove and retain four screws Ⓐ and washers Ⓑ from rear of nacelle and separate headlight housing Ⓒ from nacelle.

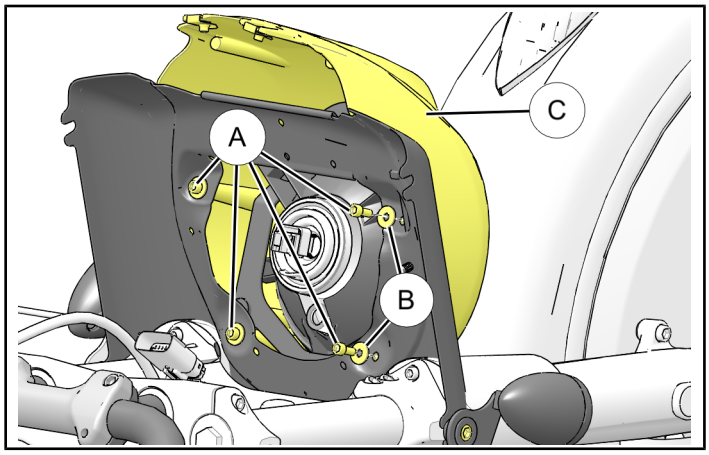

2. Carefully remove cable clip Ⓓ and remove clutch cable Ⓔ.

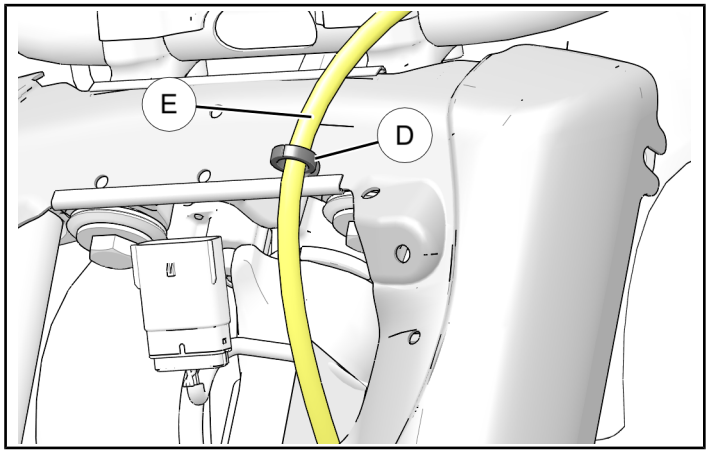

CLUTCH CABLE INSTALLATION

IMPORTANT
Do not kink, bend, or twist inner cable or outer cable casing during installation.

1. Route new clutch cable ② in same manner as removed.
2. Torque LH frame downtube Ⓚ fasteners Ⓔ, Ⓕ, Ⓖ, Ⓗ, and Ⓙ, to specification.

TORQUE
Ⓔ, Ⓕ, Ⓖ, Ⓗ, and Ⓙ = 45 ft. lbs. (61 Nm)

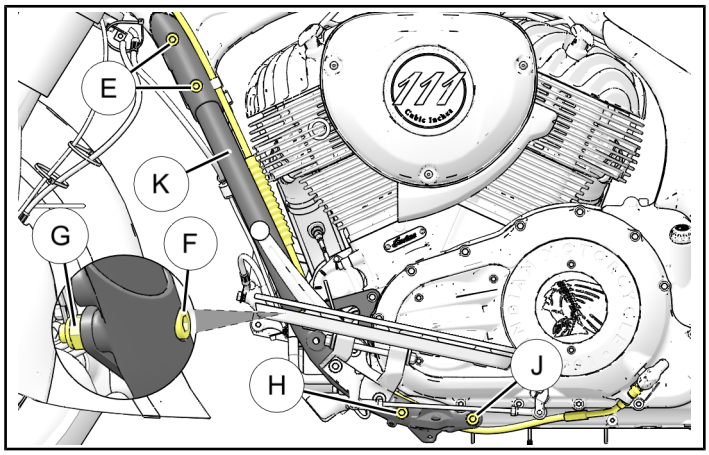

3. Install retained screw Ⓛ and P-clamp Ⓜ. Torque screw to specification.

TORQUE
84 in. lbs. (9.5 Nm)

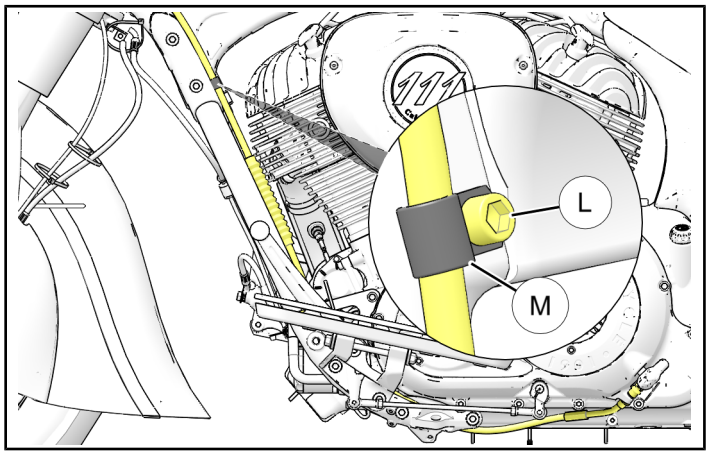

4. Apply multi-purpose grease to lever end of cable barrel and install it in clutch lever at handlebar.

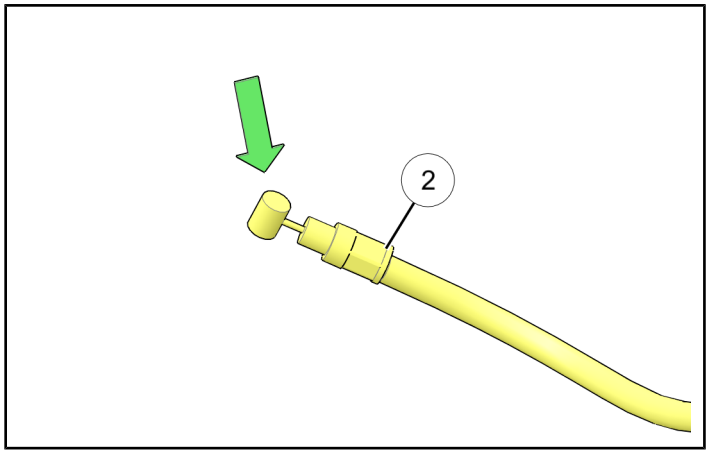

5. Install cable casing in lever perch at handlebar.
6. Install new cable ② in mounting boss located on primary cover.

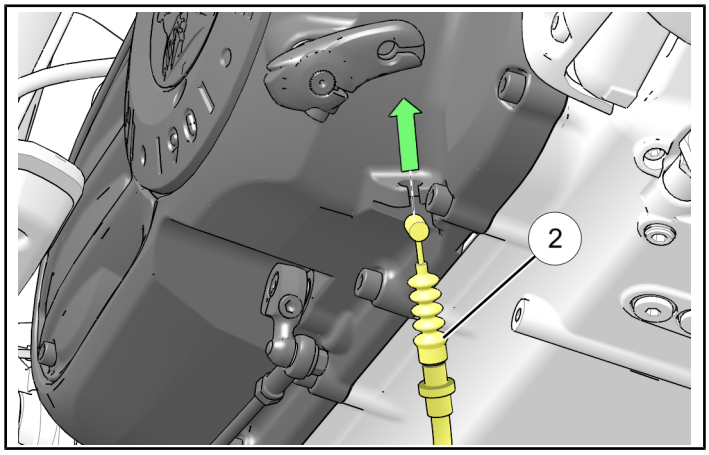

7. At release arm end of cable, pull inner cable until fully extended. Be sure upper end of cable casing is seated in lever perch at handlebar end.
8. Apply multi-purpose grease to lower barrel end of cable.

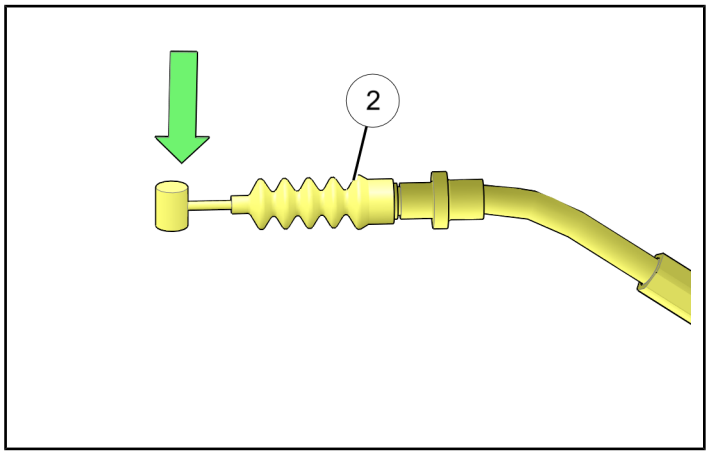

9. Protect clutch release arm Ⓒ with a shop towel. Rotate release arm inward until cable ② can be installed in release arm Ⓒ.

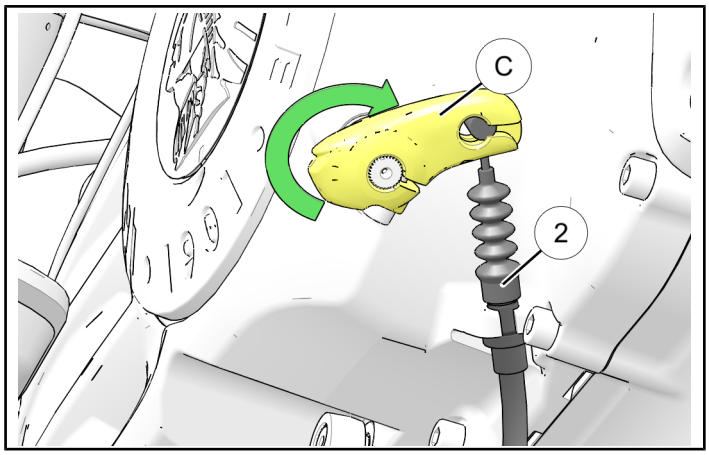

10. Install clutch cable E-clip Ⓑ at mounting boss. Install side stand bumper and bolt Ⓐ. Torque bolt to specification.

TORQUE
84 in. lbs. (9.5 Nm)

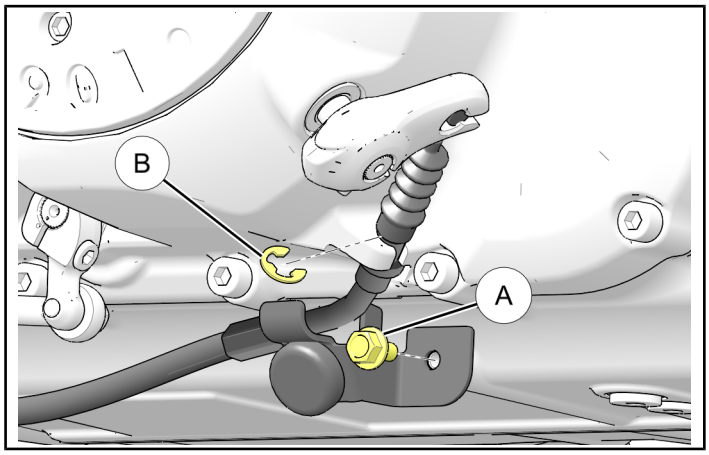

11. Apply protective film ④ to surface of dash in areas where clutch cable and brake line route and may come into contact with painted surfaces.
12. Route clutch cable as per routing noted during removal. Reinsert cable into applicable clips and replace cut cable ties.

NON-FAIRING MODELS

1. Reinstall headlight housing Ⓒ to nacelle. Install four retained screws Ⓐ and washers Ⓑ to rear of nacelle. Torque to specification.

TORQUE
75 in. lbs. (8 Nm)

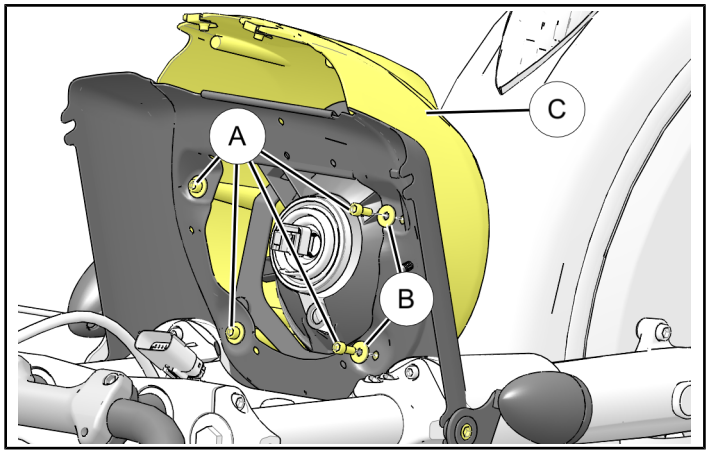

HANDLEBAR REMOVAL AND INSTALLATION

HANDLEBAR REMOVAL

1. Remove and retain two screws Ⓐ and two washers Ⓒ from under handlebar risers. Ensure rubber inserts Ⓑ (retained by screws Ⓐ) do not fall out. Carefully slide handlebar and riser assembly out of triple clamp frame Ⓒ. (Fairing/ Nacelle not shown for clarity)

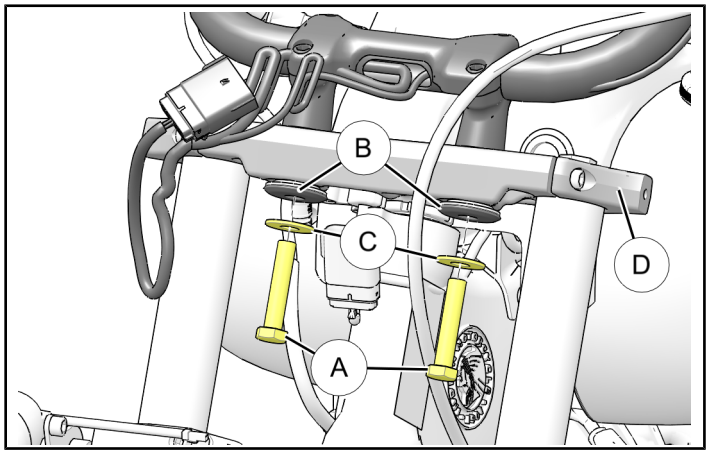

2. Remove and retain two front and two rear cap screws Ⓔ. Remove cap Ⓕ and risers Ⓖ from handlebar.

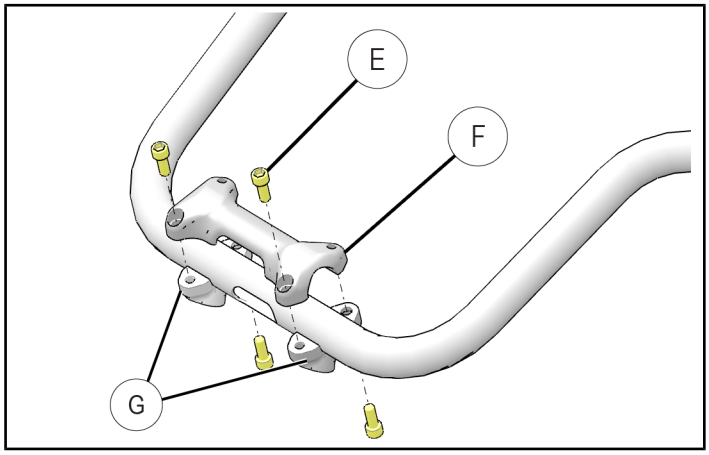

3. Pull left and right hand wiring harnesses and from switch housing wiring slots in handlebar,.

TIP
Feed excess wire into center slot of handlebar while simultaneously pulling from switch housing end.

ACCESSORY HANDLEBAR INSTALLATION

1. Insert right hand switch housing wiring harness into right hand switch housing wiring slot in handlebar and pull all terminals out of center wiring slot in handlebar. Pull harness taut until switch housing is located adjacent to wiring slot. Repeat for left hand switch housing wiring.

TIP
Use a small piece of electrical tape to hold wire terminals together, assist in sliding wires through handlebars.

2. Install risers Ⓖ and riser cap Ⓕ onto accessory handlebar ①. Center handlebar wire opening to riser cap. Rotate handle bars to align clocking marks with separation line of risers Ⓖ and riser cap Ⓕ as shown with arrow. Loosely install two front and two rear cap screws Ⓔ. Torque front two cap screws to specification. **Do not torque rear cap screws at this time**.

TORQUE
18 ft. lbs. (24 Nm)

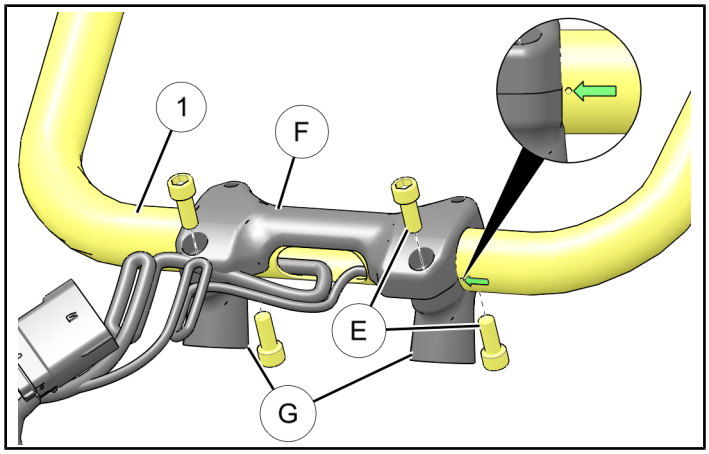

3. Carefully slide accessory handlebar ① and riser assembly into triple clamp frame Ⓓ. Ensure rubber inserts Ⓑ are installed. Install two retained bolts Ⓐ and washers Ⓒ (removed in **step 1.** of previous section), Torque to specification. Route handlebar wiring towards front.

TORQUE
60 ft. lbs. (81 Nm)

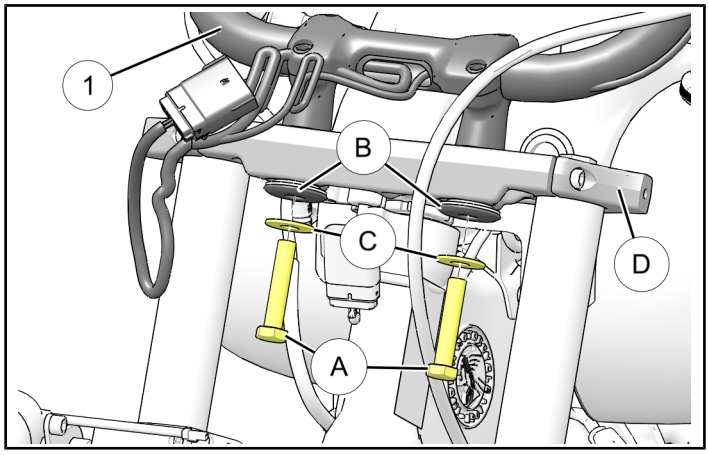

4. Torque rear cap screws Ⓔ to specification.

TORQUE
18 ft. lbs. (24 Nm)

HAND CONTROLS INSTALLATION

RIGHT HAND CONTROLS

1. Install new RH throttle tube/grip on handlebar.

TIP
"Indian®" name should be horizontal when grip properly installed. Rotate grip while sliding on to ensure it is fully seated.

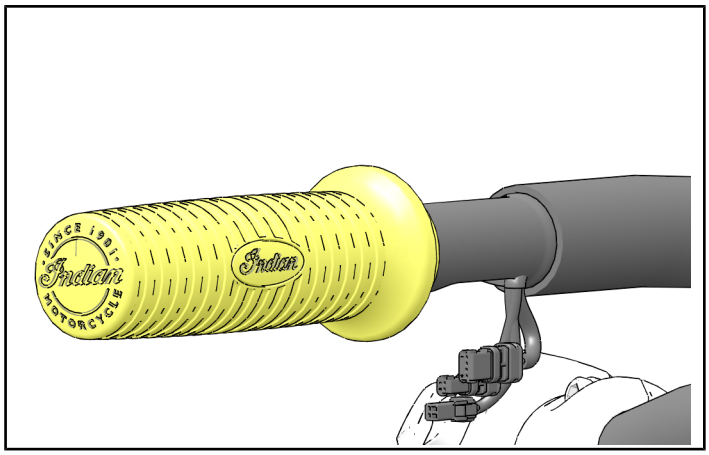

2. Orient throttle housing Ⓕ with pin in rear half of housing and hole in bar as shown. Ensure to line up slots in throttle tube to throttle housing Ⓕ.

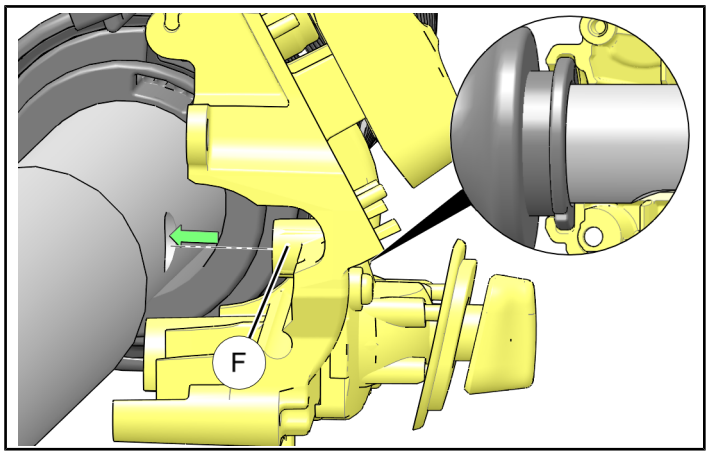

3. Close throttle housing Ⓕ and reinstall two screws Ⓔ. Torque screws to specification.

TORQUE
10 in. lbs. (1 Nm)

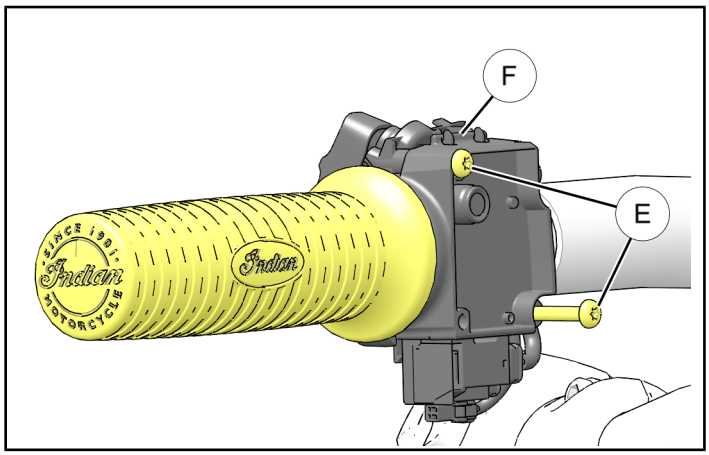

4. Twist throttle fully backward and forward to ensure throttle is properly seated and there is no dragging. If dragging repeat **steps 1 through 3** of this section.
5. Reinstall RH switch cube cover Ⓓ using two retained screws Ⓒ. Ensure that all wiring is held within switch cube Ⓓ and not pinched. Torque screws to specification.

TORQUE
10 in. lbs. (1 Nm)

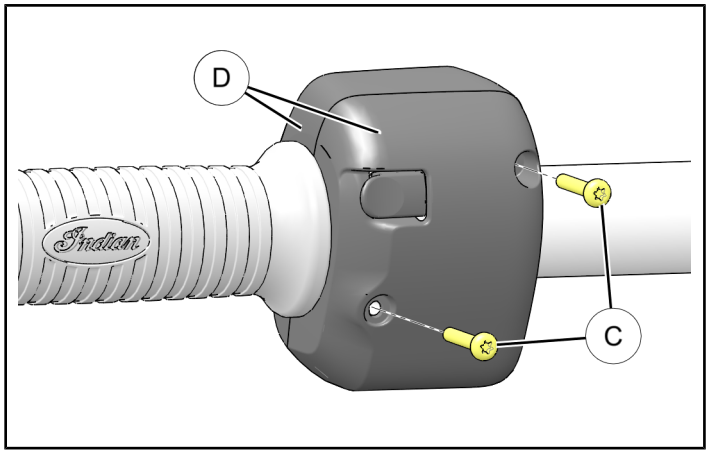

6. Reinstall brake master cylinder assembly Ⓑ using two retained screws Ⓐ. Align dimple in handlebar with center of assembly halves as shown with arrow. Starting with top screw, torque screws to specification.

TORQUE
70 in. lbs. (8 Nm)

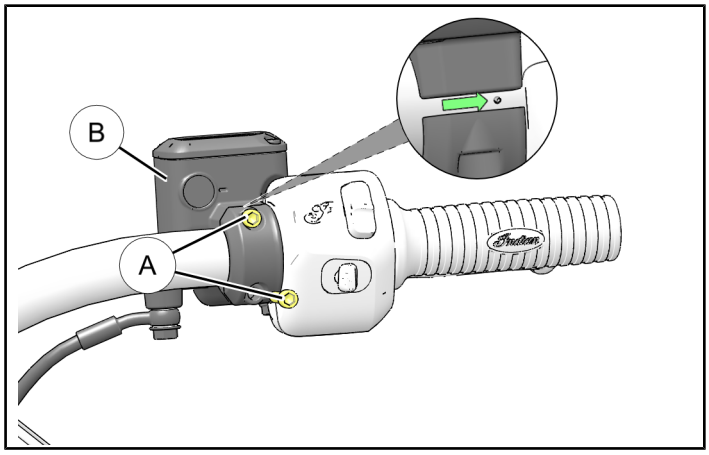

7. Twist throttle fully backward and forward to ensure throttle is properly seated and there is no dragging. If dragging repeat **steps 1 through 6** of this section.

LEFT HAND CONTROLS

1. Slide left grip onto handlebar while handlebar is clean and dry. Install inner portion of switch Ⓜ and align grip ①. Hold grip in place, remove switch Ⓜ and make a mark on handlebar aligned with tab on grip shown with arrow. Remove switch and grip.

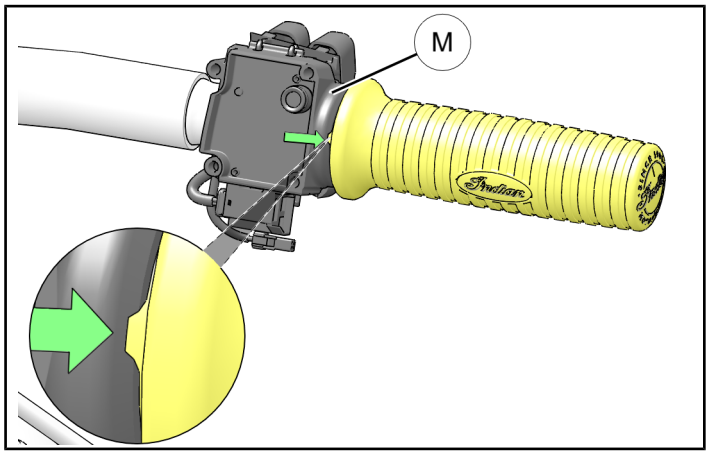

2. Spray three sprays worth of primer into grip opening and allow 5 minutes for primer to dry.

IMPORTANT
The next three steps need to be completed quickly, once adhesive dries, adjustment of grip will not be possible. Read and understand ALL steps before proceeding.

3. Apply a thick bead of adhesive (PN 2883462) 15 mm into grip 360° around the grip. Spin LH grip onto handlebar until grip bottoms out against handlebar end. Quickly rotate grip so Indian® name is horizontal and tab is aligned with mark made in **step 1** of this section. Wipe any excess glue from handlebar or grip after grip is fully seated.

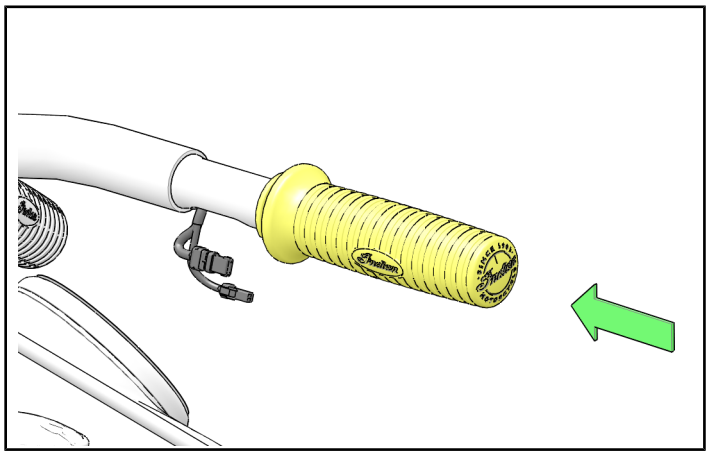

4. Quickly orient switch housing Ⓜ with pin in rear half of housing and hole in bar as shown. Ensure to line up slots on LH Grip to switch housing Ⓜ as shown.

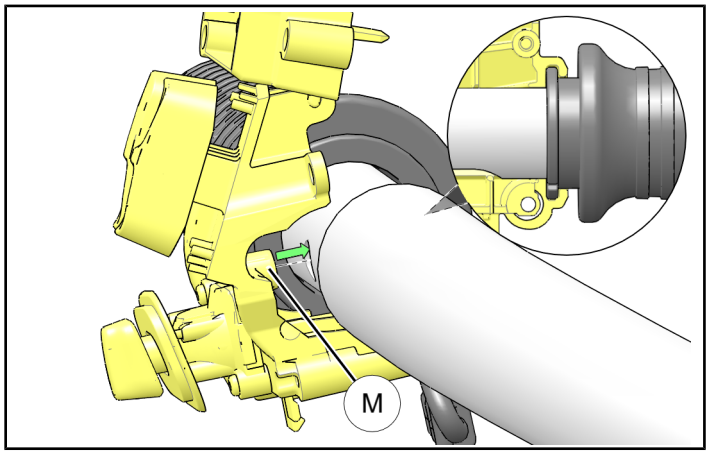

5. Quickly reinstall outer switch assembly Ⓜ with two retained screws Ⓝ. Switch assembly notch should fit over tab on grip flange as shown with arrow. Rotate and adjust grip to fit properly. Torque screws to specification.

TORQUE
10 in. lbs. (1 Nm)

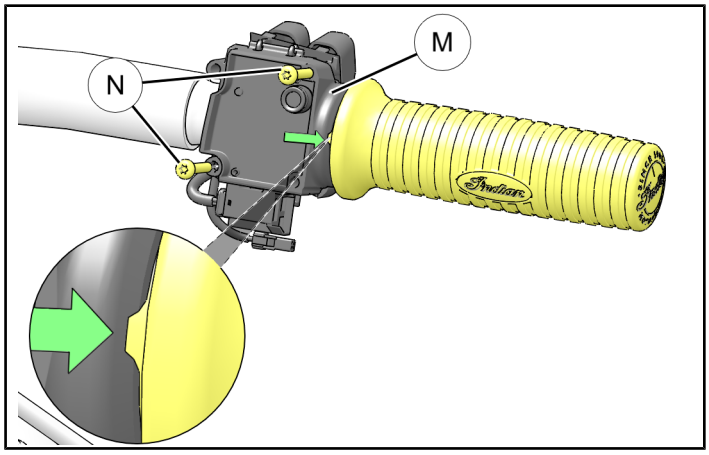

6. Loosely reinstall clutch handle assembly Ⓗ using two retained screws Ⓖ. Reinstall clutch wire connector Ⓛ to switch assemblyⓂ.

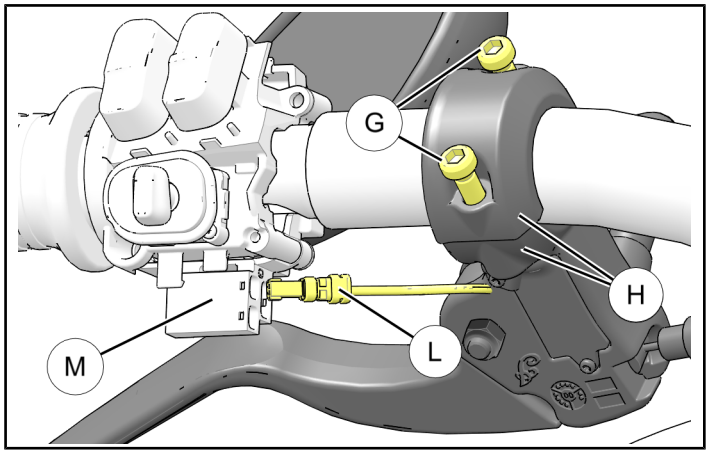

7. Reinstall LH switch cube cover Ⓚ using two retained screws Ⓙ. Ensure that all wiring is held within switch cube Ⓚ and is not pinched. Ensure clutch wire is not pinched by housing. Torque screws to specification.

TORQUE
10 in. lbs. (1 Nm)

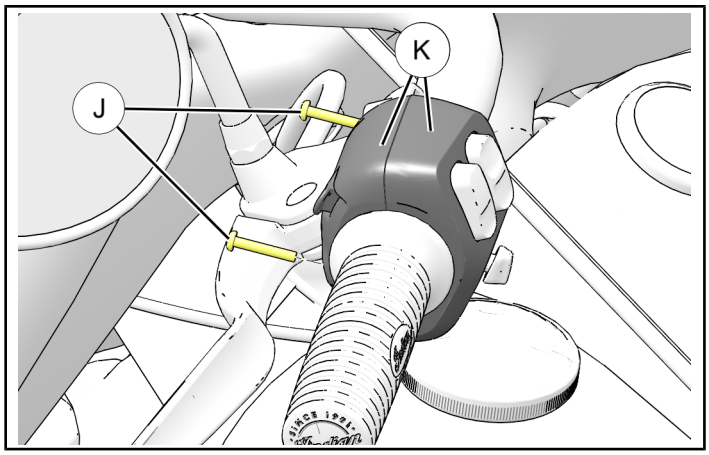

8. Align dimple in handlebar with center of clutch handle assembly Ⓗ halves as shown with arrow. Starting with top screw, torque screws Ⓖ to specification.

TORQUE
70 in. lbs. (8 Nm)

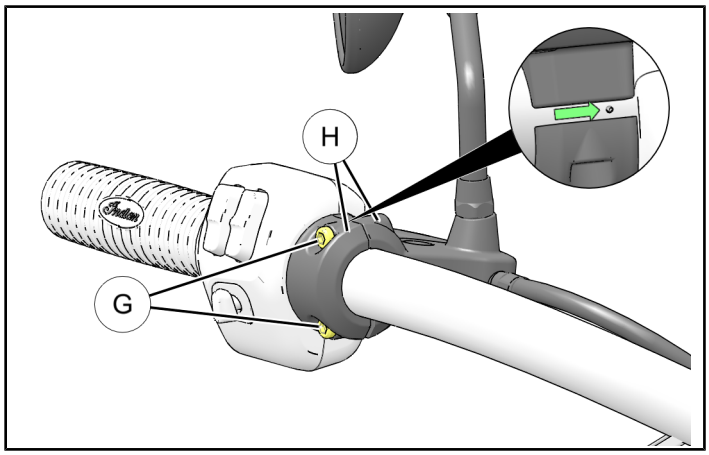

IMPORTANT
Allow motorcycle to sit for a period of 24 hours to allow glue to dry and set properly.

CLUTCH LEVER FREE PLAY

1. With handlebars pointing straight ahead, measure clutch lever free play at point shown with arrow.

MEASUREMENT
Clutch Lever Free Play: **.019-.059 inch (0.5-1.5 mm)**

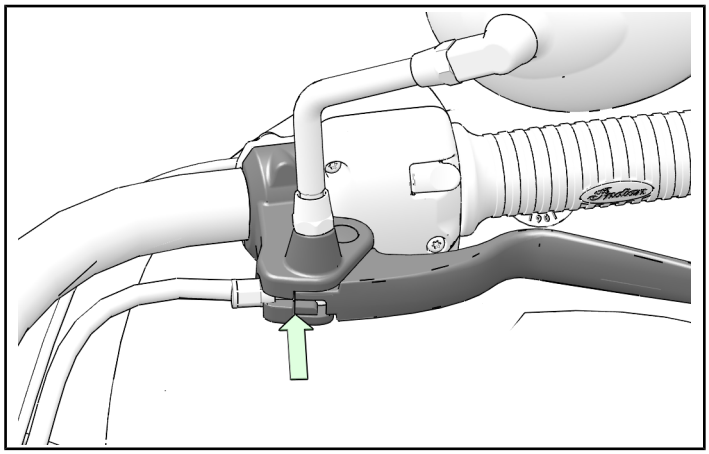

2. Compare measurement to specification. If adjustment is required, proceed to Step 3.
3. Locate clutch cable adjuster boot Ⓐ and pull it back to expose jam nut and barrel adjuster.

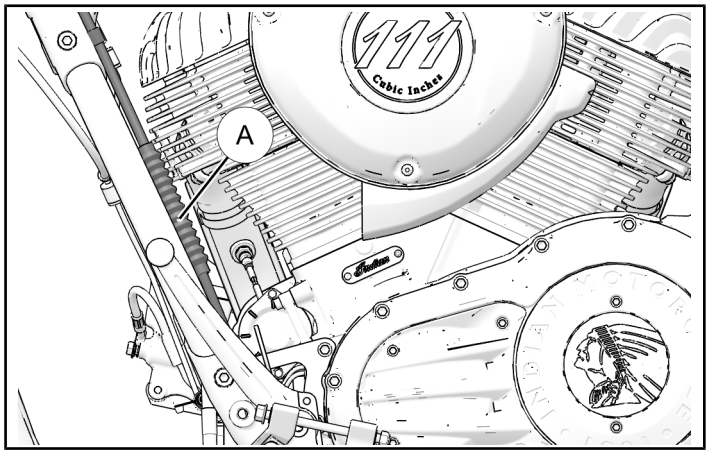

4. Hold cable and loosen adjuster jam nut.
5. Turn cable adjuster in or out until clutch free play is correct.
6. Tighten adjuster jam nut. Torque to specification.

TORQUE
48 in. lbs. (5.5 Nm)

7. Slide adjuster boot back over adjuster assembly.

FRONT BODYWORK RE-ASSEMBLY

FAIRING MODELS

1. Route handlebar wiring through fairing in same routing as referenced in fairing frame. Plug in handlebar connector Ⓔ.

TIP
Use piece of string or wire to connector left in fairing during removal to pull wiring through fairing.

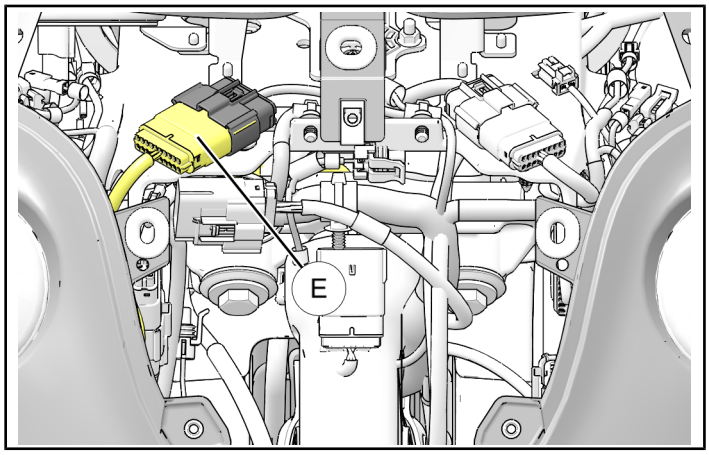

2. Replace any cut cable ties with new cable ties.
3. Turn handlebar left and right, lock-to-lock, and determine if any resistance from wire binding. If resistance is felt or wire interference is found, determine cause and re-bundle wires as necessary. Check clearances between hand controls and fuel tank. Adjust height if necessary.
4. Re-connect headlight.
5. Install headlight assembly into fairing by installing three aluminum spacers, headlight assembly, three washers then three hex screws. Torque to specification.

TORQUE
84 in. lbs. (9.5 Nm)

TIP
Insert hex screw and washer into top mounting hole of headlight assembly. Install an aluminum spacer onto top hole and loosely install screw into fairing. This will allow placement of the other two aluminum spacers prior to installing the remaining washers and screws.

6. Insert headlight bezel by inserting bezel features into rubber grommets in fairing. Install retained two flange screws and torque to specification.

TORQUE
36 in. lbs. (4.0 Nm)

NON-FARING MODELS

1. Insert rear portion of nacelle and connect auxiliary light switch (if equipped).
2. Loosen front handlebar clamp fasteners Ⓖ **(Do not remove screws)** and rotate handlebar up until rear portion of nacelle Ⓔ can be fully installed.

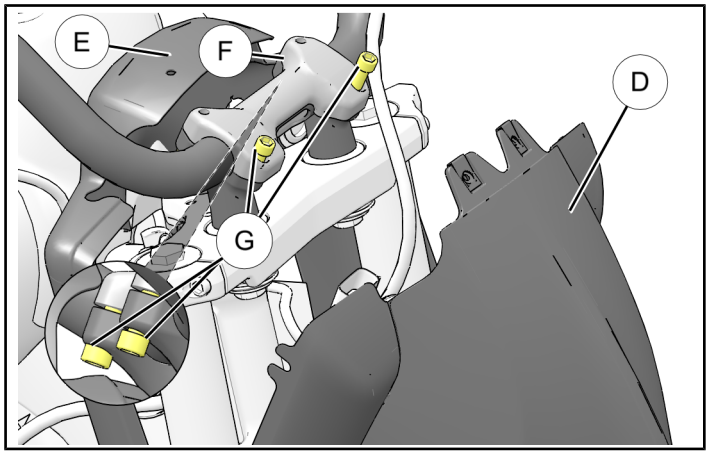

3. Re-position handlebar to rider preference (If needed).
4. Torque front handlebar clamp fasteners to specification.

TORQUE
18 ft. lbs. (24 Nm)

5. Rotate headlight bucket assembly Ⓓ into place.

6. Loosely install turn signals Ⓒ and auxiliary light bar (if equipped-not shown) and connect electrical terminals. Rotate front nacelle and headlight into place and loosely install two retained fasteners Ⓑ into each side of nacelle assembly. **Do not torque fasteners at this time.**

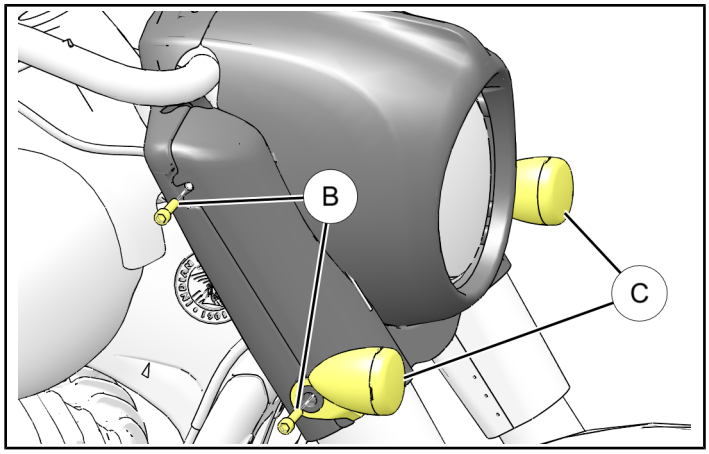

7. Install two retained fasteners Ⓐ into top of nacelle assembly. Torque to specification.

TORQUE
36 in. lbs. (4 Nm)

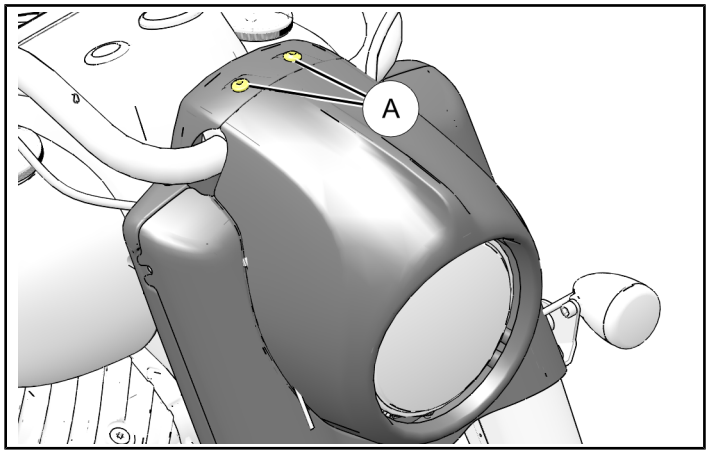

8. Turn handlebar left and right, lock-to-lock, and determine if any resistance from wire binding. If resistance is felt or wire interference is found, determine cause and re-bundle wires as necessary. Check clearances between hand controls and fuel tank. Adjust height if necessary.
9. Torque turn signal/auxiliary lightbar (if equipped)/nacelle side fasteners Ⓑ (installed in **step 2** of this section) to specification.

TORQUE
18 ft. lbs. (24 Nm)

10. Install windshield assembly, if equipped.

FEEDBACK FORM

A feedback form has been created for the installer to provide any comments, questions or concerns about the installation instructions. The form is viewable on mobile devices
by scanning the QR code or by clicking **HERE** if viewing on a PC.

FEEDBACK FORM