DASH AUDIO ADD-ON KIT

P/N 2884544

BEFORE YOU BEGIN

Read these instructions and check to be sure all parts and tools are accounted for. Please retain these installation instructions for future reference and parts ordering information.

REQUIRED, SOLD SEPARATELY

This kit only contains parts for installation of the Dash Audio Add-On Kit. Installation of the Dash Audio Kit, PN 2884282, is also required (sold separately).

IMPORTANT
If installing **BOTH** the Dash Audio Kit AND this Dash Audio ADD-ON Kit at the same time, Polaris recommends you **start** with these **ADD-ON** Kit instructions. You will be directed to applicable steps in the **Dash Audio** Kit instructions when appropriate.

KIT CONTENTS

This Kit includes:

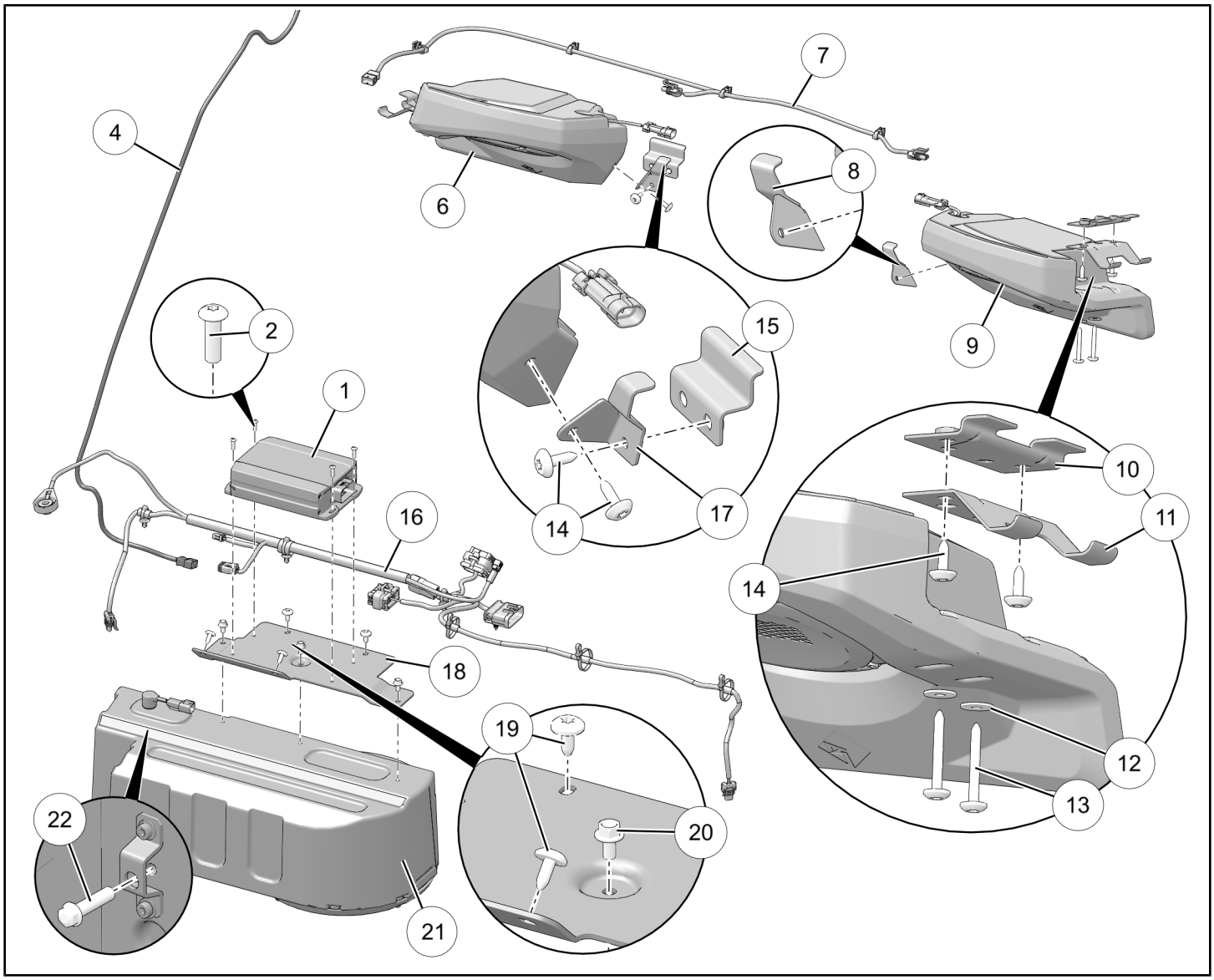

REF	QTY	PART DESCRIPTION	PART NUMBER
1	1	Amp	2414533
2	4	Screw, Torx® Pan Head, Self-Tapping - #10–24 X 5/8	7517756
3	3	Edge Clip (not shown)	7082403
4	1	Harness, Rear Speaker, Non-Crew	2414910
5	1	Harness, Rear Speaker, Crew (not shown)	2414911
6	1	Speaker, Rear, RH	2637785
7	1	Harness, Rear Speaker Crossover	2415216
8	1	Bracket, Rear Speaker, Inboard, LH	5268696–458
9	1	Speaker, Rear, LH	2637784
10	2	Bracket, Rear Speaker, Upper Outboard	5268204–458
11	2	Bracket, Rear Speaker, Lower Outboard	5268205–458
12	4	Washer - 6.4 X 20.0 X 1.6	7556054
13	4	Screw, Torx® Truss Head, Self-Tapping - M6 X 1.0 X 50	7519841
14	8	Screw, Torx® Truss Head, with Locking Patch - M6 X 1.0 X 20, 8.8	7519112
15	2	Bracket, Rear Speaker, Rear Inboard	5268698–458
16	1	Harness, Audio	2415015
17	1	Bracket, Rear Speaker, Inboard, RH	5268697–458
18	1	Bracket, Subwoofer/Amp	5267849–329
19	4	Screw, Torx® Truss Head, Self-Tapping - M6 X 1.0 X 16	7518936
20	3	Screw, Hex Flange - M6 X 1.0 X 12, 8.8	7517704
21	1	Subwoofer	2637563
22	2	Screw, Hex Flange - M6 X 1.0 X 25, 10.9	7519297

TOOLS REQUIRED

- Safety Glasses
- Fish Tape (or equivalent)
- Pliers, Push Pin Rivet
- Screwdriver Set, Torx®
- Socket Set, Metric
- Wrench Set, Metric

IMPORTANT

Your Dash Audio Add-On Kit is exclusively designed for your vehicle. Please read the installation instructions thoroughly before beginning. Installation is easier if the vehicle is clean and free of debris. For your safety, and to ensure a satisfactory installation, perform all installation steps correctly in the sequence shown.

HARNESS DETAIL

REAR SPEAKER HARNESS ④⑤:

NOTE
GENERAL® 1000 rear speaker harness ④ shown; GENERAL® 4 1000 rear speaker harness ⑤ identical except for length.

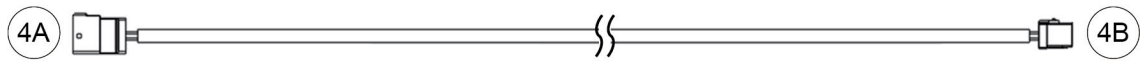

REF	PART DESCRIPTION	WIRE COLOR	PIN QTY/ GENDER	CONNECTS TO
4A	Connector, Rear Speaker Signal IN	-	4 male	Audio harness ⑯, connector 16K
4B	Connector, Rear Speaker Signal OUT	-	4 female	Rear speaker crossover harness ⑦, connector 7A

REAR SPEAKER CROSSOVER HARNESS ⑦:

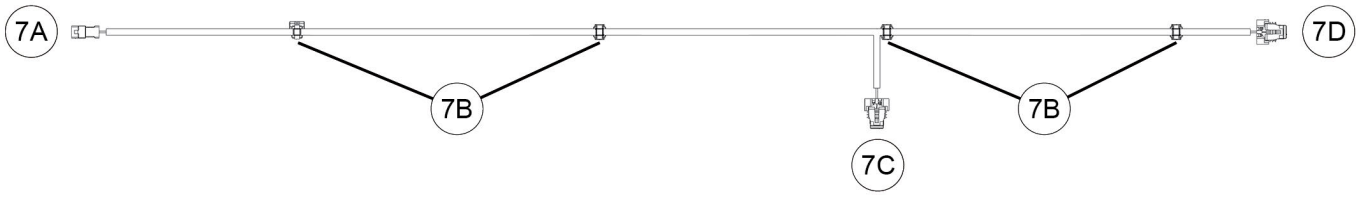

REF	PART DESCRIPTION	WIRE COLOR	PIN QTY/ GENDER	CONNECTS TO
7A	Connector, Rear Speaker Signal IN	-	4 male	Rear speaker harness ④, connector 4B
7B	Clip, Edge	-	-	Vehicle structure
7C	Connector, Speaker Signal OUT, RH	White*	2 female	RH rear speaker ⑥
7D	Connector, Speaker Signal OUT, LH	Gray*	2 female	LH rear speaker ⑨

* With or without black stripe.

AUDIO HARNESS ⑯:

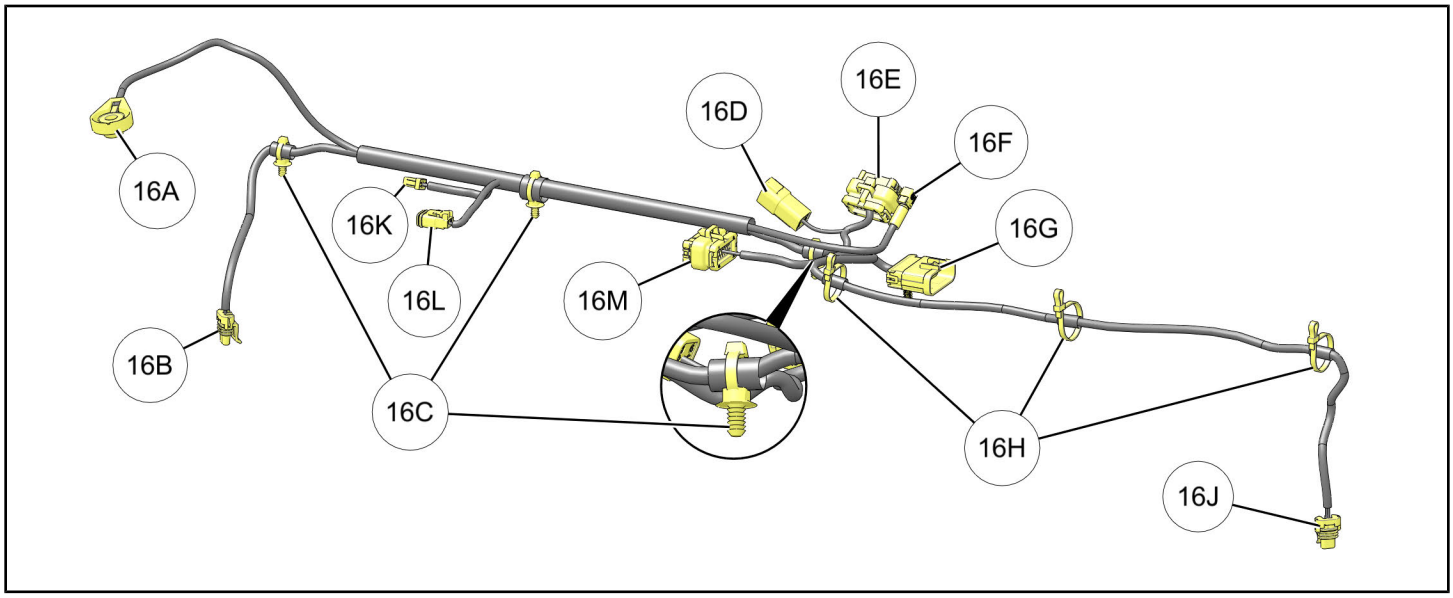

REF	PART DESCRIPTION	WIRE COLOR	PIN QTY/ GENDER	CONNECTS TO
16A	Connector, Antenna, AM/FM	-	FIAMM	See instructions included with Dash Audio Kit, PN 2884282 (sold separately)
16B	Connector, Speaker Signal OUT, RH	White*	2 female	
16C	Clip, Routing	-	-	
16D	Connector, USB	-	6 male	
16E	Connector, Head Unit	-	23 female	
16F	Connector, Antenna Signal, AM/FM	-	FAKRA	
16G	Connector, Power Harness (with attached fir tree clip)	-	16 male	
16H	Cable Tie, Double	-	-	
16J	Connector, Speaker Signal OUT, LH	Gray*	2 female	
16K	Connector, Rear Speaker Signal OUT	-	4 female	Rear speaker harness ④, connector 4A (rear speaker harness ⑤ similar)
16L	Connector, Subwoofer	-	2 female	Subwoofer ㉑
16M	Connector, Amp	-	23 female	Amp ①

* With or without black stripe.

INSTALLATION INSTRUCTIONS

VEHICLE PREPARATION

DISCONNECT BATTERY

1. Shift vehicle transmission into “PARK”. Turn ignition switch to “OFF” position and remove key.

⚠ WARNING

Ensure red positive (+) battery terminal is COMPLETELY COVERED by protective boot. Accidental tool contact across both battery terminals will result in high current electrical arc, and may result in battery explosion. Death or serious injury may occur.

Black negative (-) cable MUST be disconnected from battery terminal. Failure to disconnect cable may result in electrical arc when installing connections at terminal block. Death or serious injury, or damage to vehicle or accessory, may occur.

2. Remove driver’s seat (**GENERAL® 4 1000**: left rear passenger seat) and battery access cover, then disconnect black negative (-) cable from battery.

REMOVE ROOF LINER

If roof liner is NOT installed, proceed to next section. Otherwise, remove liner as follows:

NOTE

GENERAL® 1000 shown; GENERAL® 4 1000 similar.

1. If accessory interior light is installed, then remove it. Otherwise, remove and retain two each screws Ⓐ and washers Ⓑ.

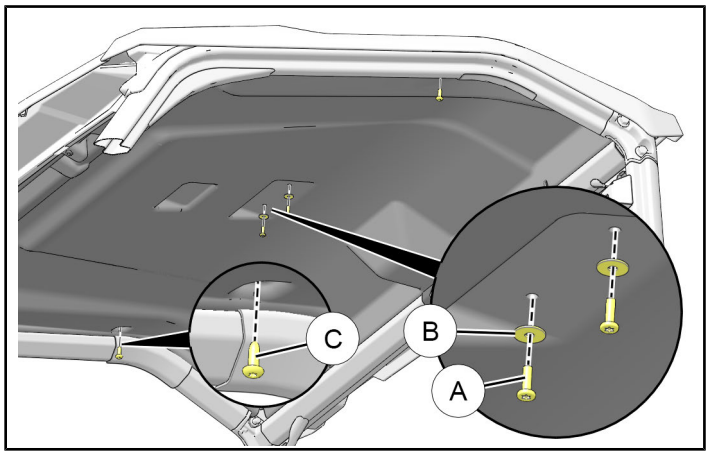

2. Remove and retain screw Ⓒ from each side of liner.

3. Remove and retain three screws Ⓓ from each front corner of liner.

NOTE

LH side shown; RH side opposite.

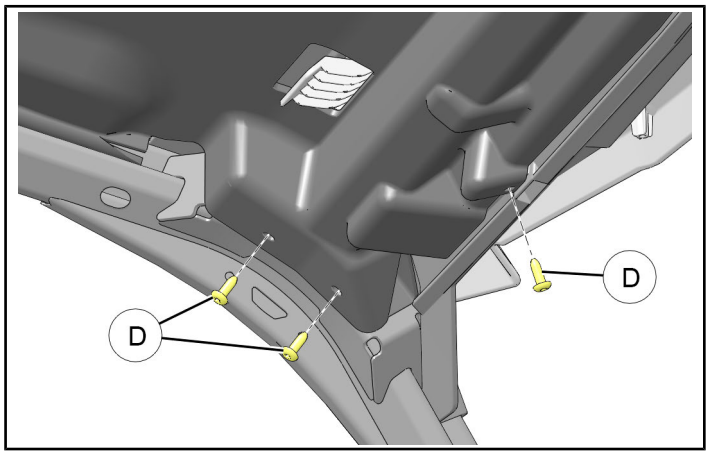

4. Carefully pull LH and RH edges of liner from between ROPS and roof seal, then remove rear edge of liner from B-pillar cross-member.

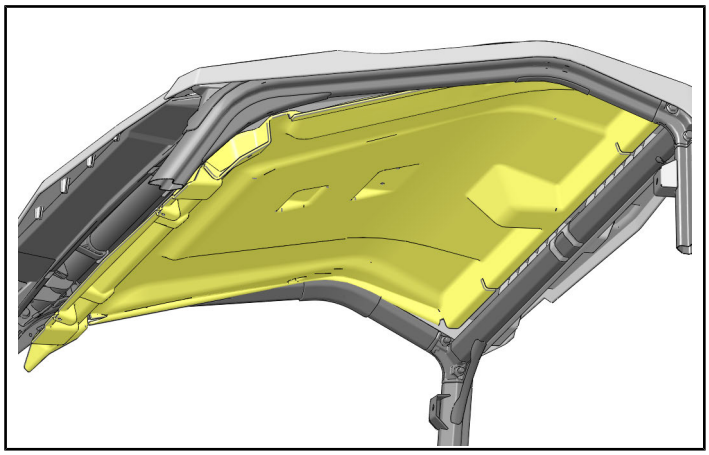

REMOVE UPPER DASH PANEL

1. Remove hood.
2. If windshield is installed, then open or remove it as required to gain access to upper dash.
3. Remove five push pin rivets Ⓐ from front side of panel, and two push pin rivets Ⓑ from outboard ends of panel. Retain rivets.

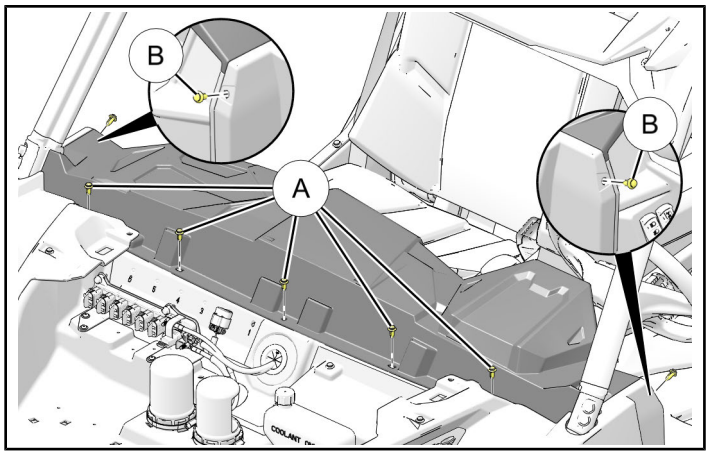

4. Slide panel upward and rearward, detaching eight spring clips Ⓒ. Set dash aside.

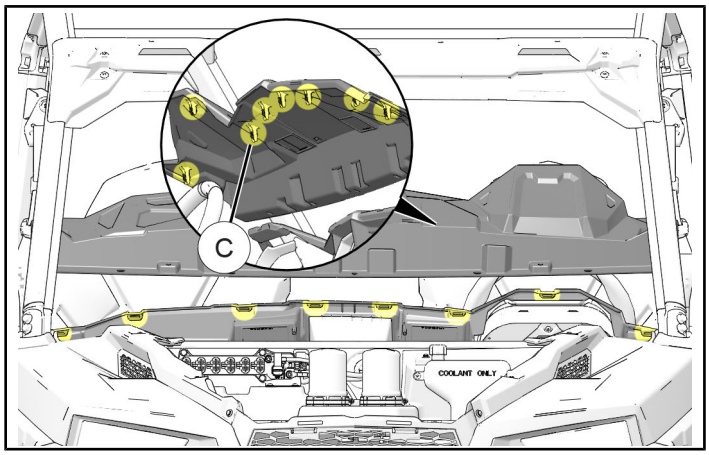

REMOVE CENTER STORAGE BOX

1. Using fingers, remove center storage box Ⓐ by pressing top edge of box down, disengaging box locking tabs from main dash panel. Tip box out of dash and remove.

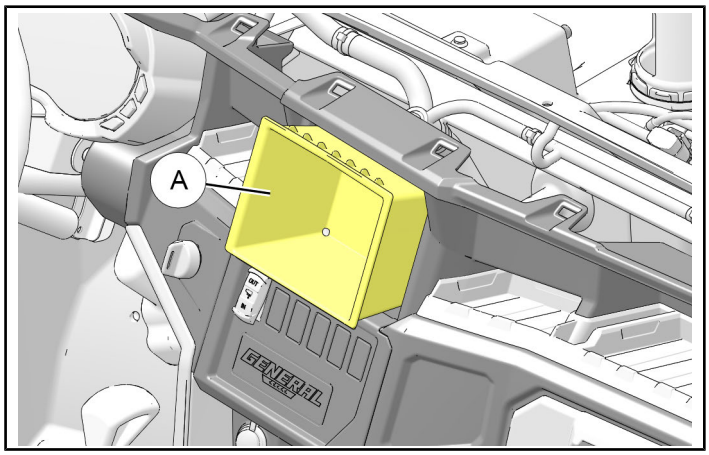

REMOVE CENTER CONTROL CONSOLE

1. Using fingers, carefully pull upper edge of console rearward to detach four spring clips Ⓐ, then lift two lower tabs Ⓑ out of slots.

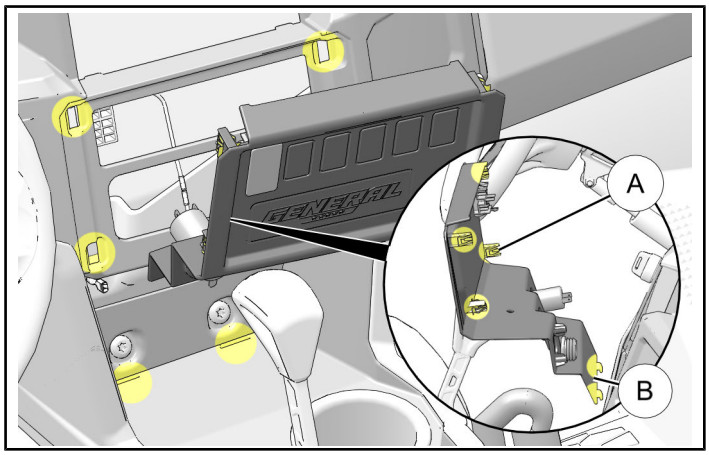

2. Label and disconnect electrical harnesses from switches, sockets, or other devices mounted to console.
3. Carefully cut one rectangular switch opening from console (or remove switch blank, if installed). Debur edges as required.

NOTE
Any open location may be used.

INSTALL USB HARNESS FROM DASH AUDIO KIT

If not already done, install USB harness included in Dash Audio Kit (PN 2884282). When that step is complete, return to these instructions and proceed to the next section, **REMOVE MAIN DASH PANEL**.

IMPORTANT
Do not perform any other Dash Audio Kit installation steps at this time. When this Dash Audio **ADD-ON** Kit is fully installed you will be directed back to complete installation of the Dash Audio Kit.

REMOVE MAIN DASH PANEL

1. Detach main chassis harness connector Ⓐ from instrument cluster.

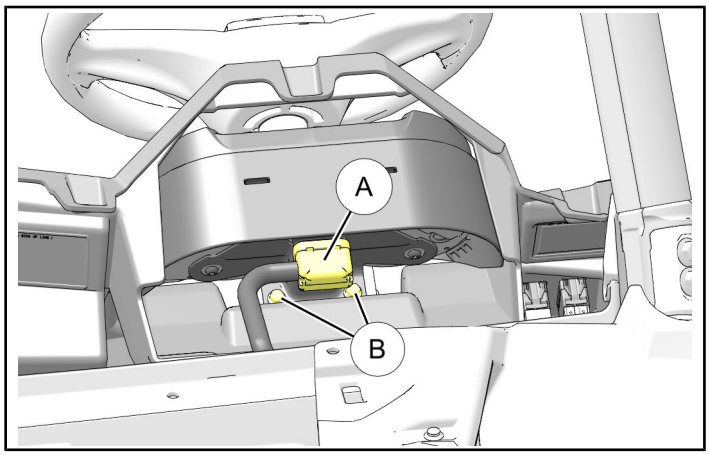

2. Remove two screws Ⓑ, then lift instrument cluster assembly out of dash and set aside.
3. Remove the following fasteners:
   - One push pin rivet Ⓒ and screw Ⓓ from each side of dash.
   - Two screws Ⓓ in glove box
   - Two screws Ⓓ forward of gear shift lever
   - Two screws Ⓓ forward of instrument cluster

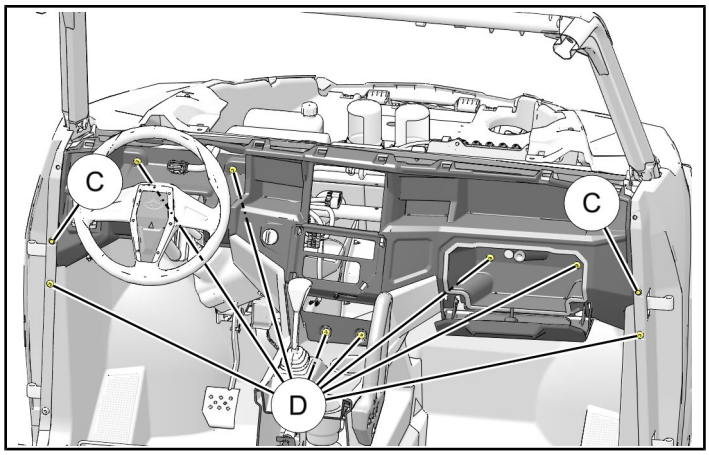

4. Detach slots Ⓔ in main dash panel from tabs Ⓕ in lower floor console panels, then lift dash panel away from support structure. Set panel aside.

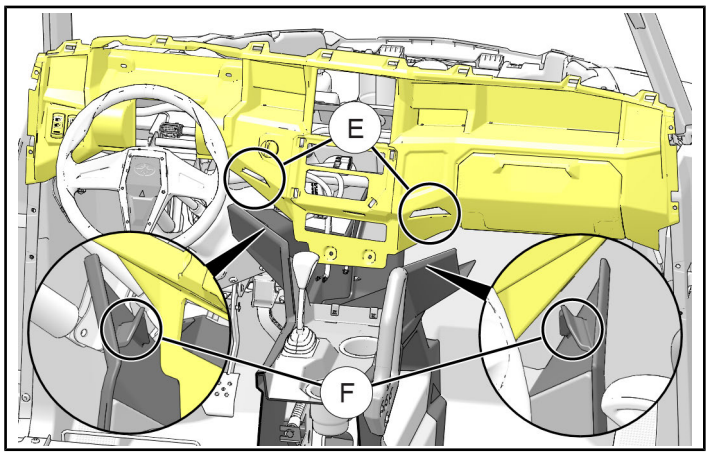

ACCESSORY INSTALLATION

INSTALL SUBWOOFER AND AMPLIFIER

1. Install bracket ⑱ to subwoofer ㉑ using three screws ⑳. Tighten screws.

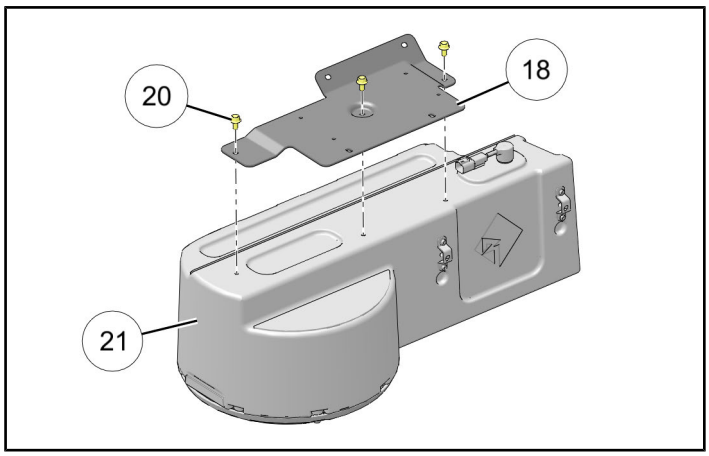

2. Install bracket ⑱ (with subwoofer ㉑) to dash support structure using four screws ⑲. Tighten screws.

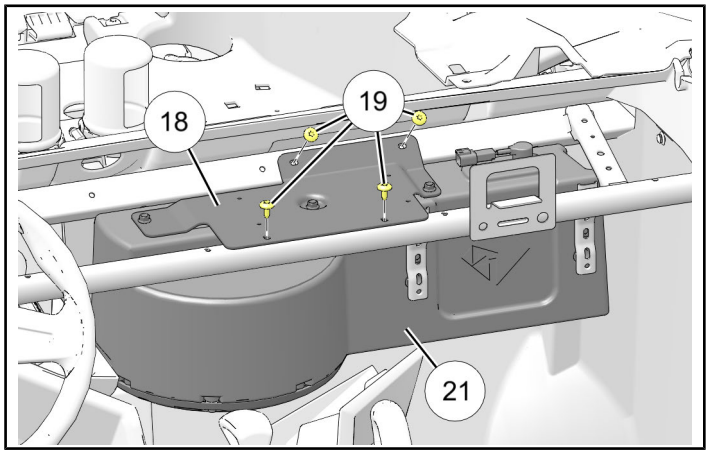

3. Install two screws ㉒ through dash support brackets into subwoofer. Tighten screws.

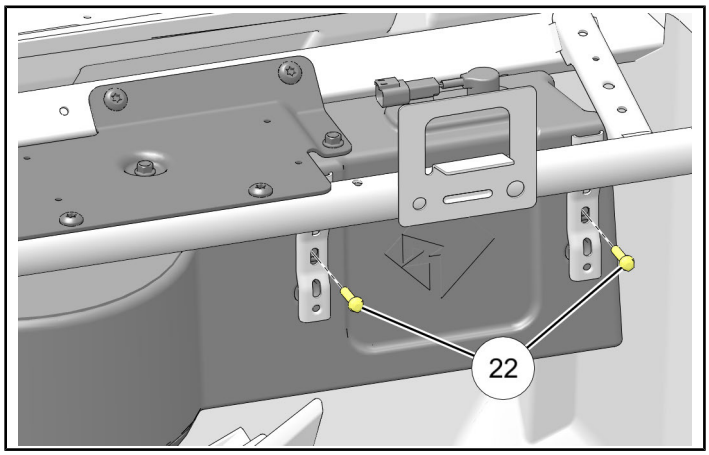

4. Install amp ① to bracket ⑱ using four screws ②. Ensure amp connector is on LH side as shown. Tighten screws.

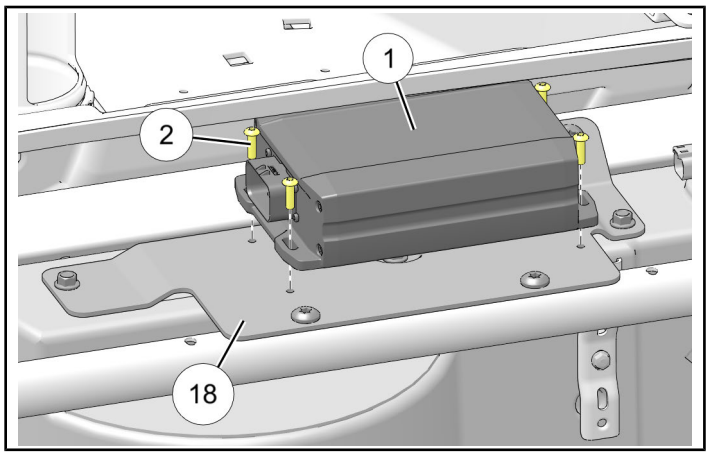

INSTALL REAR SPEAKERS

NOTE
See previous section, **HARNESS DETAIL**, for connector identification.

NOTE
GENERAL® 1000 installation shown; GENERAL® 4 1000 installation similar (above C-pillar cross-member).

1. Feed fish tape (or equivalent) through oval hole Ⓐ at top of A-pillar, then down and out hole at base of A-pillar.

   Attach harness connector 4B to tape, then carefully pull connector up and out top of A-pillar.

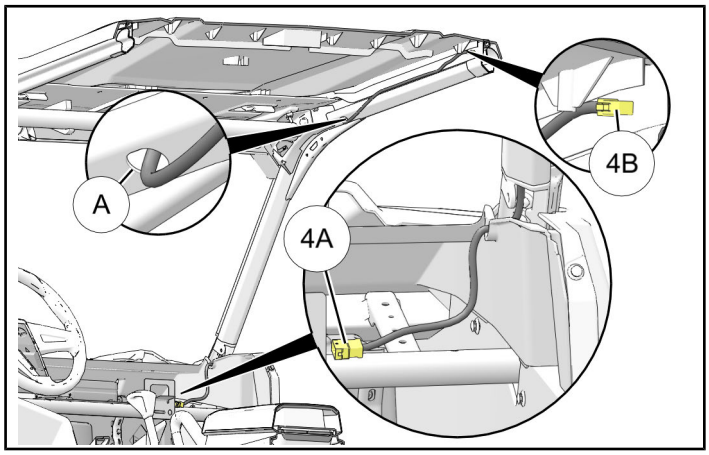

2. Join connector 4B on rear speaker harness ④ (or ⑤, if applicable) to connector 7A on crossover harness ⑦.

   Ensure speaker connectors 7C and 7D are centered in roof, then secure crossover harness to roof using four edge clips 7B as shown.

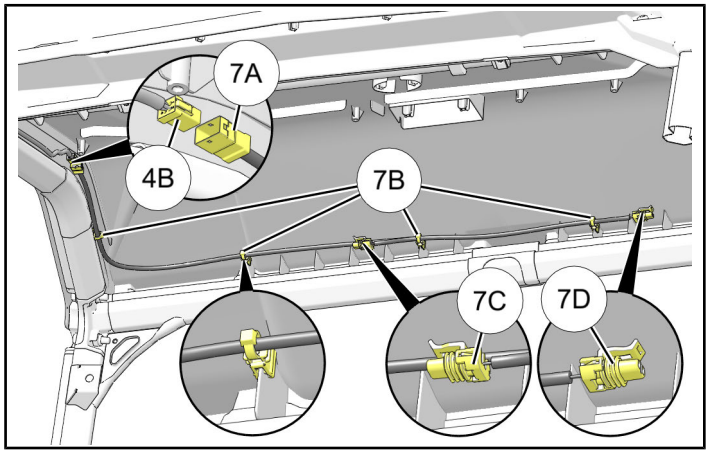

3. Loosely assemble outboard speaker brackets ⑩ and ⑪ using two screws ⑭.

NOTE
Outboard brackets are symmetrical for RH and LH sides.

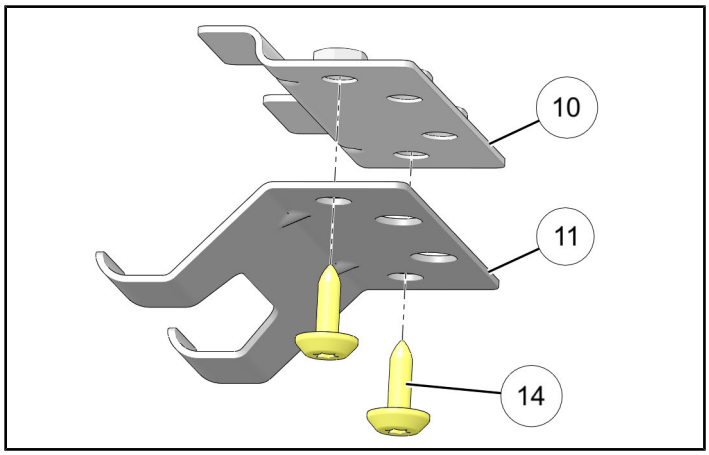

4. Install speaker bracket assembly to ROPS tubing at location and orientation shown. Tighten screws ⑭ only enough to clamp brackets to ROPS. Final bracket positioning will occur later.

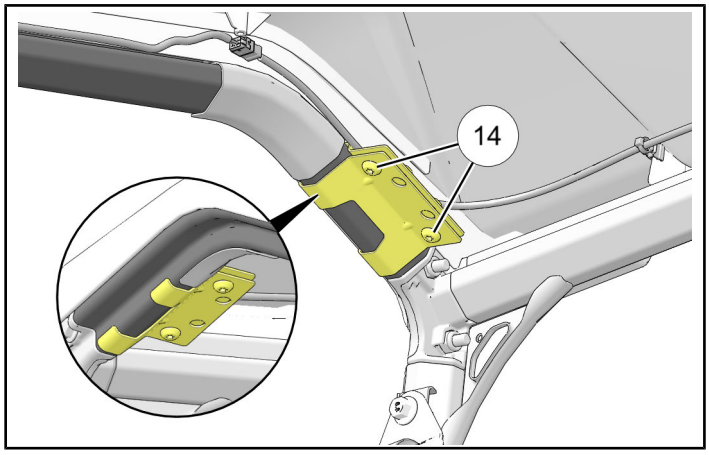

5. Identify **RH** speaker ⑥ and **RH** inboard bracket ⑰. Notice differences from **LH** speaker ⑨ and **LH** inboard bracket ⑧.

NOTE
Correct orientation is with speaker connector on the **INBOARD** side.

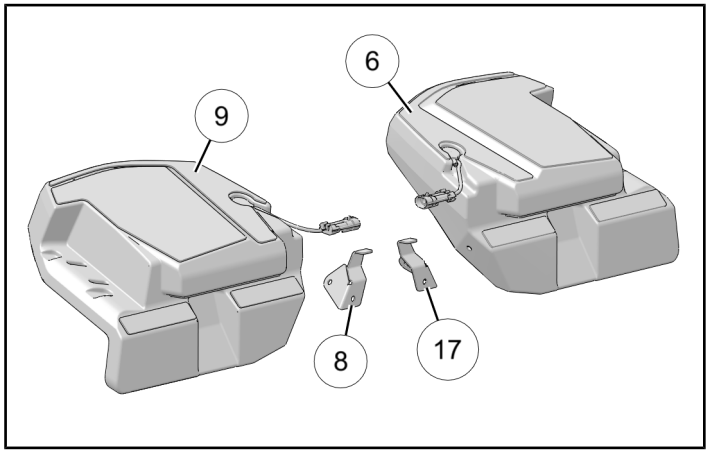

6. Loosely install RH inboard bracket ⑰ to RH speaker ⑥ using screw ⑭.

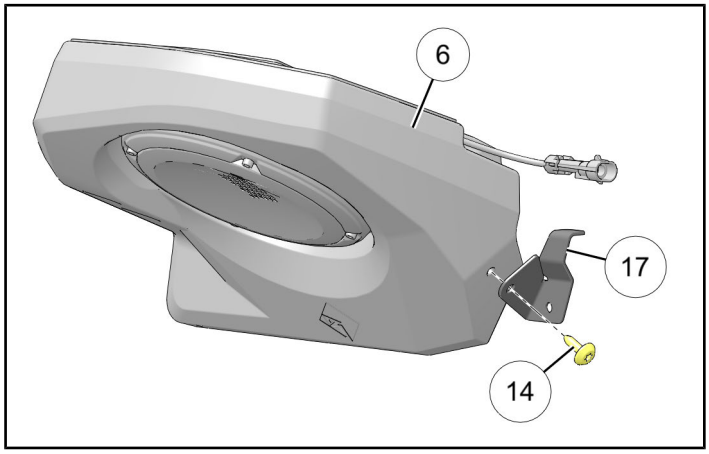

7. Position RH speaker ⑥ into corner of ROPS so inboard bracket ⑰ is nested into ROPS cross-member.

   Slide outboard bracket assembly ⑩ and ⑪ along ROPS tubing until nuts in bracket align with slots in speaker as shown.

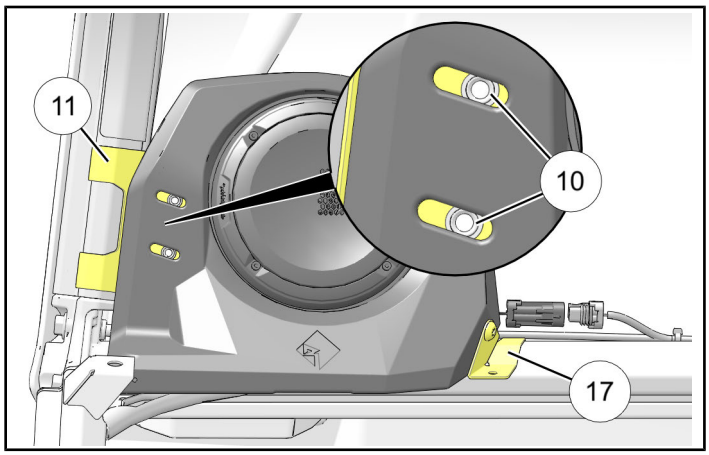

8. Temporarily remove speaker, then tighten two screws ⑭. See previous Step 4.
9. Install RH speaker ⑥ to ROPS using the following hardware, then tighten all screws.
   - OUTBOARD: Two each screws ⑬ and washers ⑫
   - INBOARD: Screw ⑭ and inboard bracket ⑮ (either bracket hole may be used)

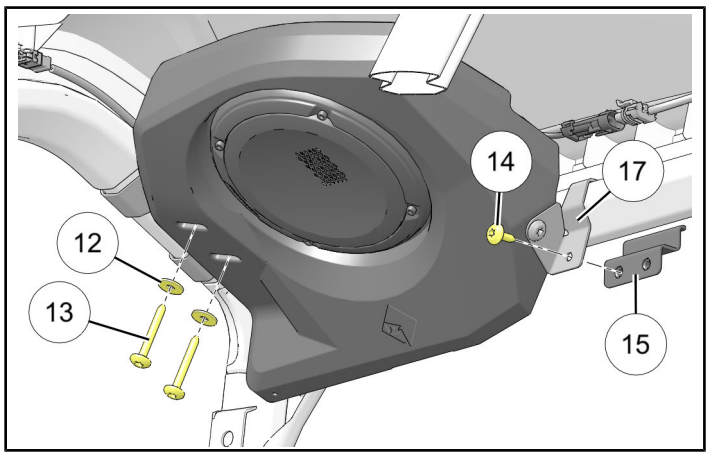

10. Repeat Steps 3–9 for LH speaker ⑨ and LH inboard bracket ⑧.
11. Join speakers to crossover harness ⑦:
    - RH speaker ⑥ to crossover connector 7C
    - LH speaker ⑨ to crossover connector 7D

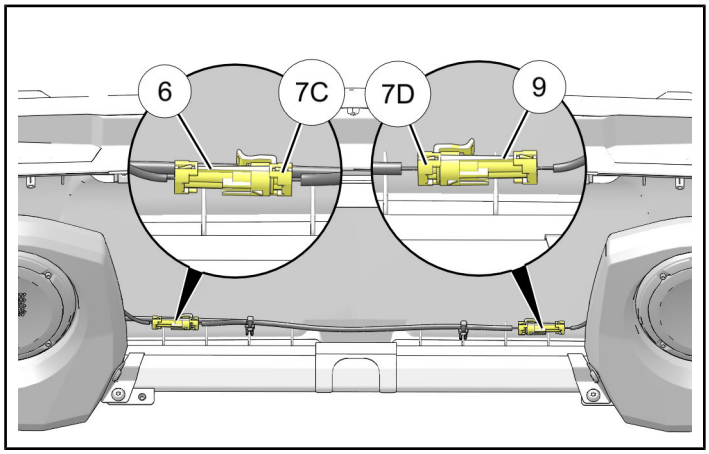

12. Ensure harnesses ④ (or ⑤, if applicable) and ⑦ are routed to prevent contact with hot components, sharp edges (including roof liner if/when reinstalled), or moving parts. Secure harness to roof using edge clips ③ every 12 inches (300 mm).

NOTE
GENERAL® 1000 installation shown; GENERAL® 4 1000 installation similar.

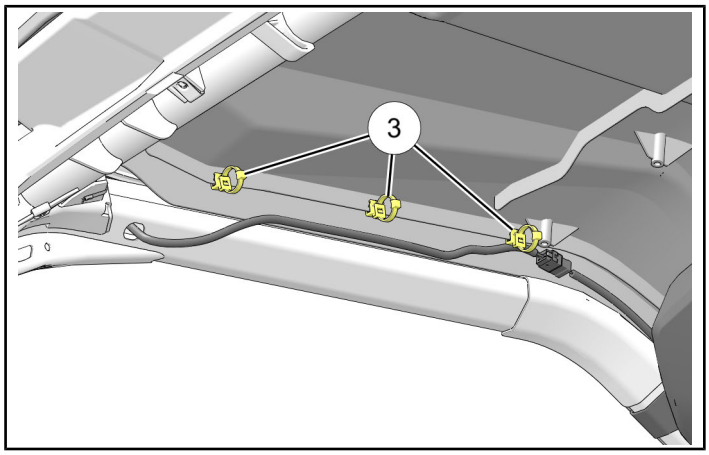

REINSTALL MAIN DASH PANEL

Reinstall main dash panel in reverse order of removal. See previous section, **REMOVE MAIN DASH PANEL**.

INSTALL AUDIO HARNESS

NOTE
See previous section, **HARNESS DETAIL**, for connector identification.

1. Identify three holes Ⓐ on top of dash support tube.

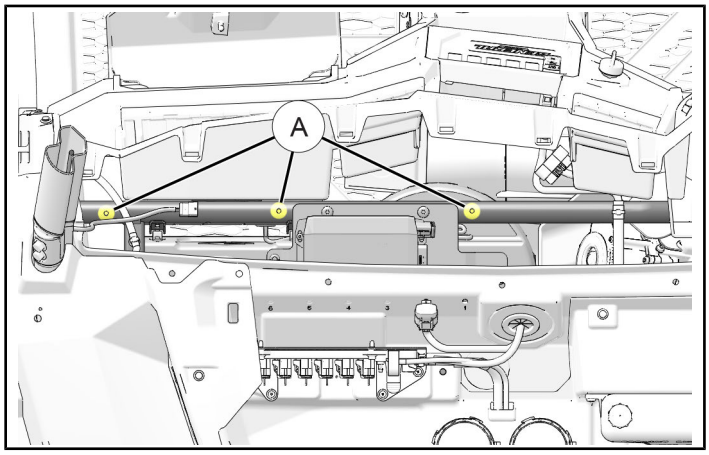

2. Orient audio harness ⑯ so RH branch (with AM/FM antenna connector 16A) is on RH side of vehicle. Secure harness to previously identified holes Ⓐ using three routing clips 16C.

NOTE
RH fender shown partially transparent for clarity. Do not secure connector 16G to dash support tube at this time.

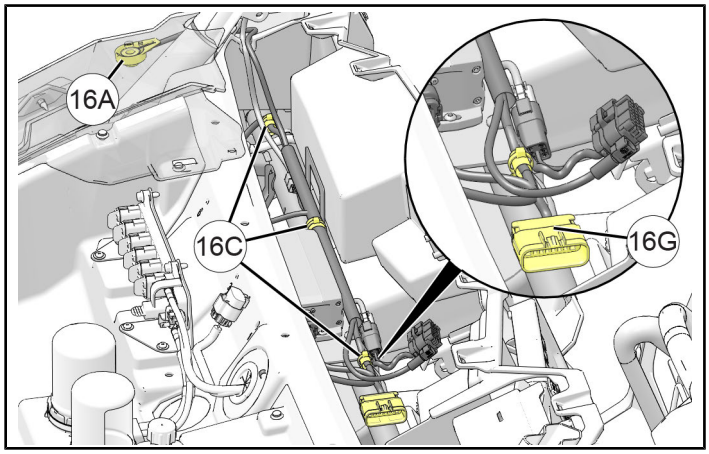

3. Secure LH branch of audio harness ⑯ to main chassis harness using three double cable ties 16H. Half of each double cable tie is pre-installed to audio harness.

   Adjust harness branch so locations of double cable ties coincide with locations of existing chassis harness cable ties and routing clips.

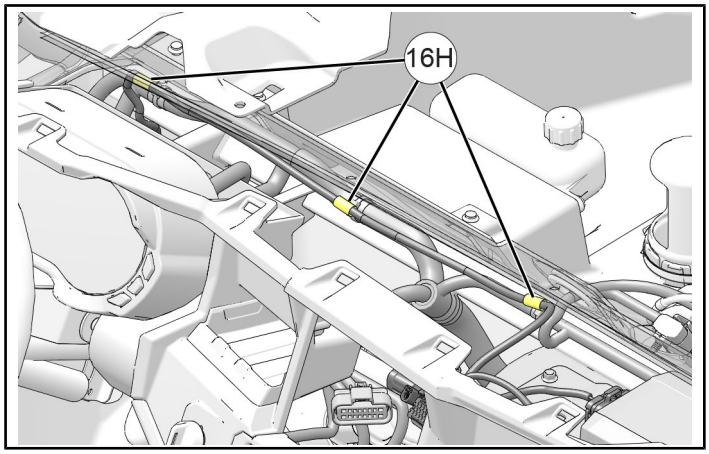

4. Join connector 16D on audio harness ⑯ to mating connector Ⓑ on USB harness.

NOTE
See instructions included with Dash Audio Kit, PN 2884282 (sold separately).

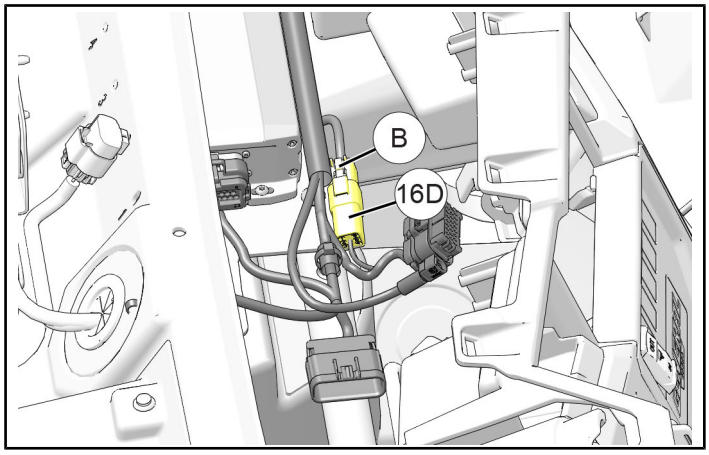

5. Join connector 16M on audio harness ⑯ to amp ①.

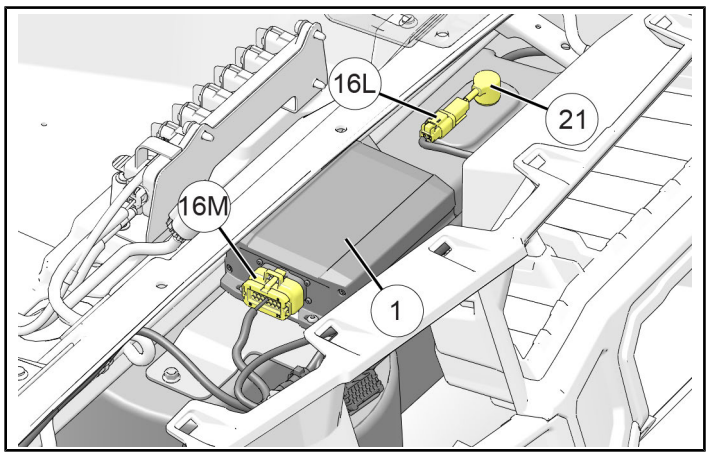

6. Join connector 16L on audio harness ⑯ to subwoofer ㉑.
7. Join connector 16K on audio harness ⑯ to connector 4A on rear speaker harness ④ (or ⑤, if applicable).

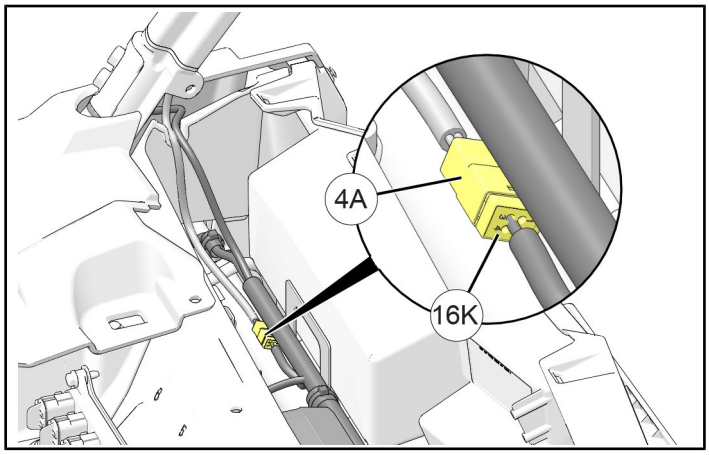

NEXT STEPS

Installation of this Dash Audio ADD-ON Kit is complete.

- If also installing Dash Audio Kit (PN 2884282), then proceed to the instructions included in that kit, Step 7 (“Install Power Harness”).

NOTE
Components unique to this Dash Audio ADD-ON Kit (such as subwoofer, amp, rear audio, and associated connectors) will not be shown in the basic Dash Audio Kit.

- If Dash Audio Kit (PN 2884282) has been previously installed (in its entirety), then restore access and reconnect the black negative (-) cable to battery.

FEEDBACK FORM

A feedback form has been created for the installer to provide any comments, questions or concerns about the installation instructions. The form is viewable on mobile devices by scanning the QR code or by clicking **HERE** if viewing on a PC.