POLARIS® 4500 HD WINCH KIT

P/N 2883860

APPLICATION

Verify accessory fitment at Polaris.com.

BEFORE YOU BEGIN

Read these instructions and check to be sure all parts and tools are accounted for. Please retain these installation instructions for future reference and parts ordering information.

KIT CONTENTS

This Kit includes:

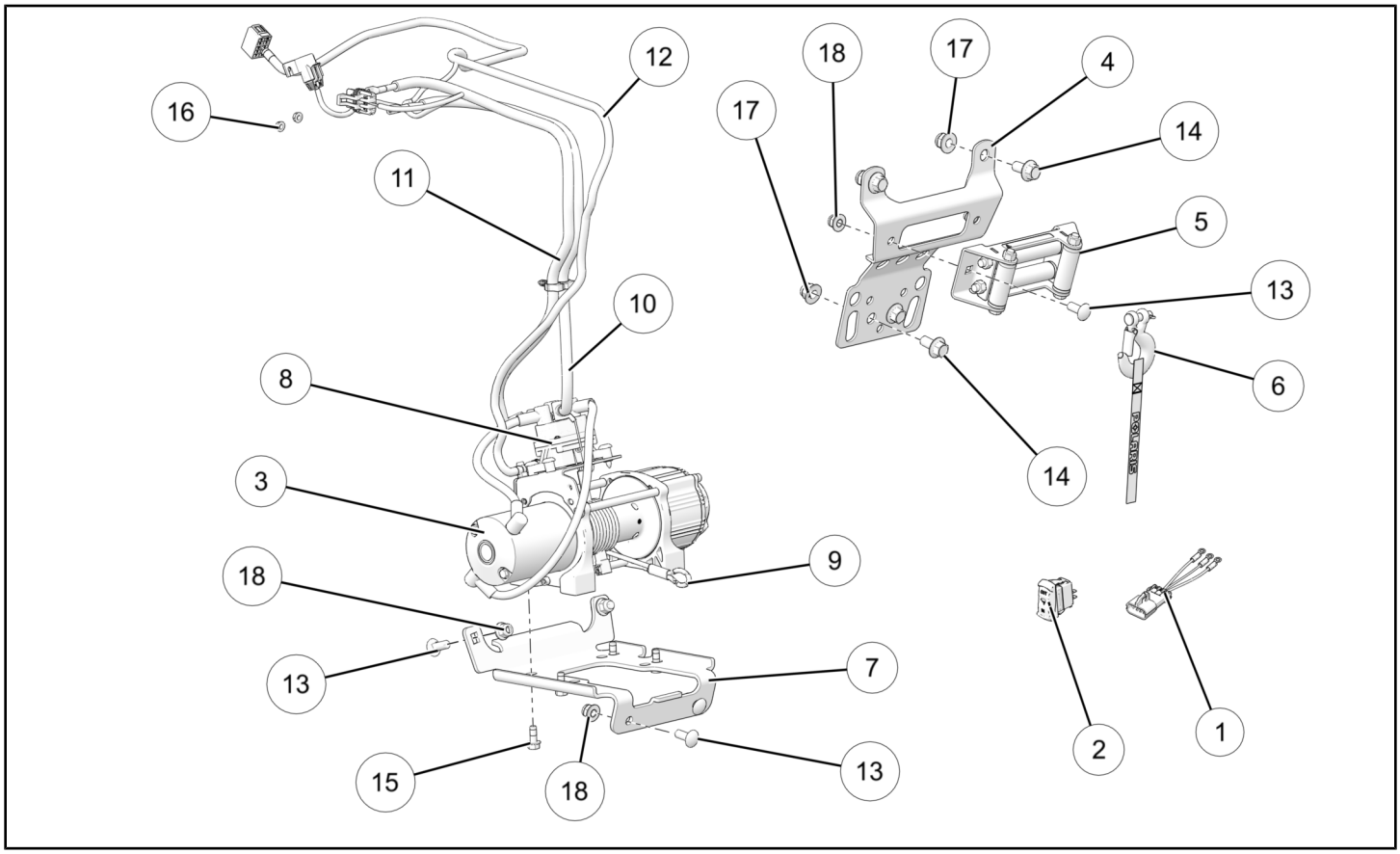

REF	QTY	PART DESCRIPTION	PART NUMBER
1	1	Harness Adapter	2413447
2	1	Dash Switch	4015688
3	1	4500 Winch Assembly	2636470
4	1	Fairlead Mounting Bracket	5258106
5	1	Fairlead	2411847
6	1	Winch Hook	2411836
7	1	Winch Mounting Bracket	5257962
8	1	Contactor (Included on winch assembly)	4015600

REF	QTY	PART DESCRIPTION	PART NUMBER
9	1	Winch Cable	2878889
10	1	Battery Cable, Positive	4018231
11	1	Battery Cable, Negative	4018231
12	1	Winch control Harness	2414804
13	6	Screw - CAR, M10 X 1.5 X 25	7519372
14	4	Screw - M12 X 1.75 X 25	7519072
15	4	Screw - HXFL, M8 X 1.25 X 20	7519133
16	2	Nut, Battery Cable	7547270
17	4	Locking Nut - M12 X 1.75	7547441
18	6	Locking Nut - M10 x 1.5	7547423
	1	Instructions	9929139

TOOLS REQUIRED

- Safety Glasses
- Drill
- Drill Bit: 1/4” (6mm)
- Pliers, Push Pin Rivet
- Pliers, Side Cutting
- Socket Set, Hex Bit, Metric
- Socket Set, Metric
- Socket Set, Torx® Bit
- Torque Wrench
- Wrench Set, Metric

IMPORTANT

Your Polaris® 4500 HD Winch Kit is exclusively designed for your vehicle. Please read the installation instructions thoroughly before beginning. Installation is easier if the vehicle is clean and free of debris. For your safety, and to ensure a satisfactory installation, perform all installation steps correctly in the sequence shown.

ASSEMBLY TIME

Approximately 48 minutes

NOTE
Additional time may be required for optional steps, or to accommodate other installed accessories.

INSTALLATION INSTRUCTIONS

CAUTION

BEFORE STARTING INSTALLATION, always ensure vehicle is properly secured on a flat stable surface to avoid accidental tipping, unwanted movement and to prevent personal injury and/or damage to equipment. Shift vehicle transmission into “PARK”. Turn key to “OFF” position and remove from vehicle.

1. **DISCONNECT BATTERY.**

⚠ WARNING

ALWAYS disconnect black negative (-) cable from battery **FIRST**. Failure to do so will result in a high current electrical arc, and may result in battery explosion, if tool touches grounded frame. Death or serious personal injury may occur.

a. Lift the driver side seat latch Ⓐ located behind seat bottom and remove the driver seat Ⓑ. Set seat aside for later reinstallation.

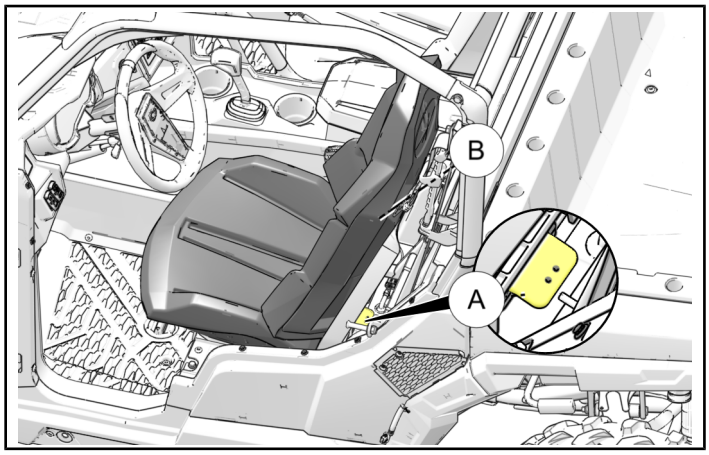

b. Remove battery access panel Ⓒ to access the battery terminals.

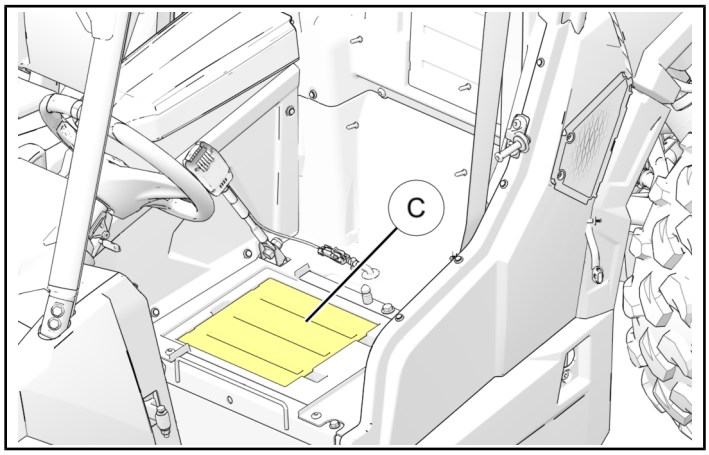

c. Disconnect black negative (-) cable from battery **FIRST**.

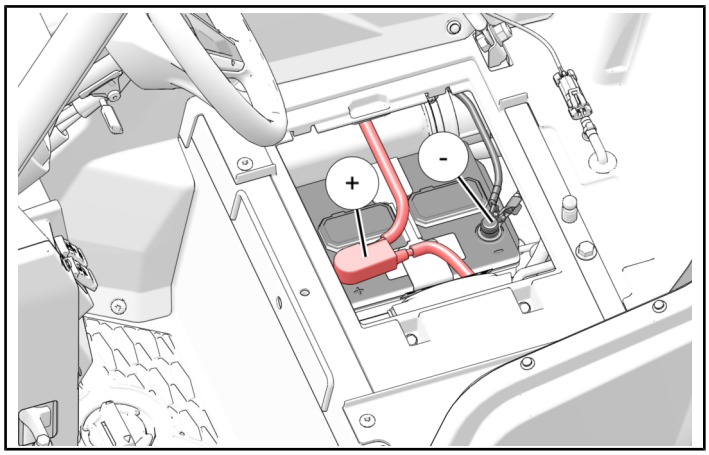

d. Next, disconnect red positive (+) cable from battery.

2. **REMOVE HOOD.**

a. Rotate the two hood latches to release the hood. Pull the hood forward and up to remove from vehicle.

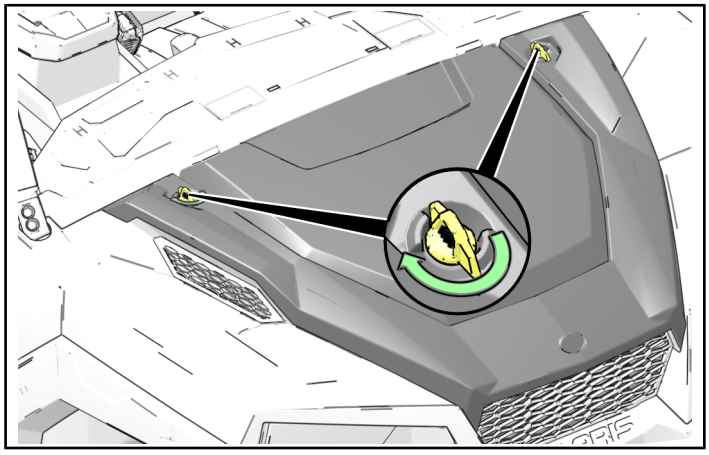

3. **REMOVE WINCH COVER.**

a. Remove lower front winch cover Ⓐ by removing four push rivets Ⓑ.

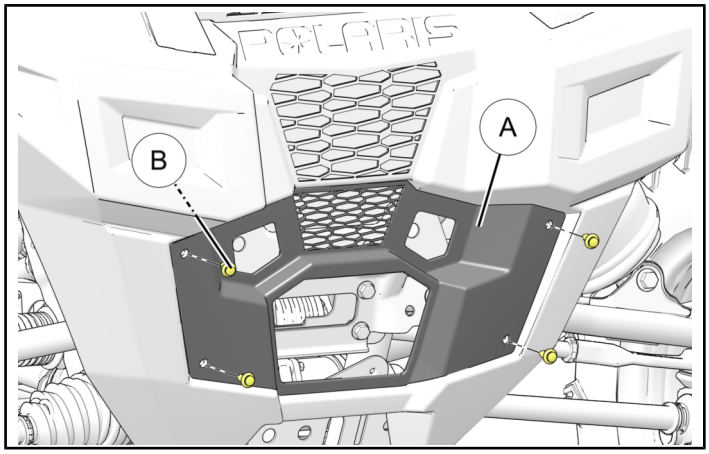

4. **INSTALL WINCH ASSEMBLY.**

   a. Slide winch mounting bracket ⑦ into position from the passenger side as shown. Orient and align winch mounting bracket to front suspension bracket and steering bracket as shown. Secure into position with provided carriage bolts ⑬ and locking nuts ⑱. Torque fasteners to below specification.

TORQUE
30 ft. lbs. (40.7 Nm)

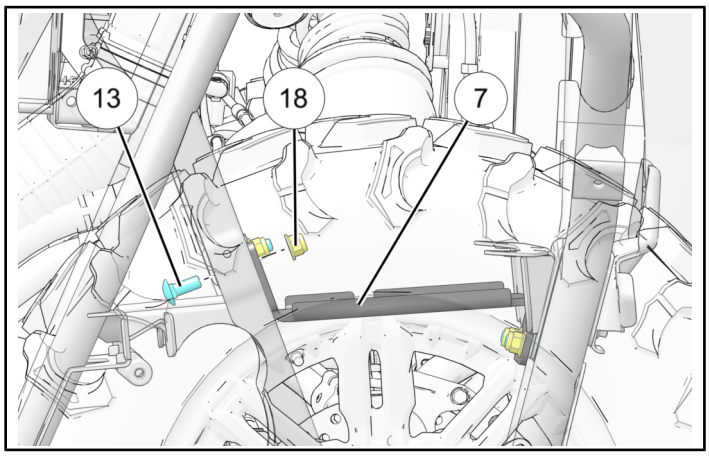

   b. Slide and position winch assembly ③ onto the winch mounting bracket as shown. Ensure mounting holes on winch assembly and mounting brackets are aligned. Use provided fasteners ⑮ to secure winch assembly onto winch mounting bracket. Torque fasteners to below specification.

TORQUE
16 ft. lbs. (21.7 Nm)

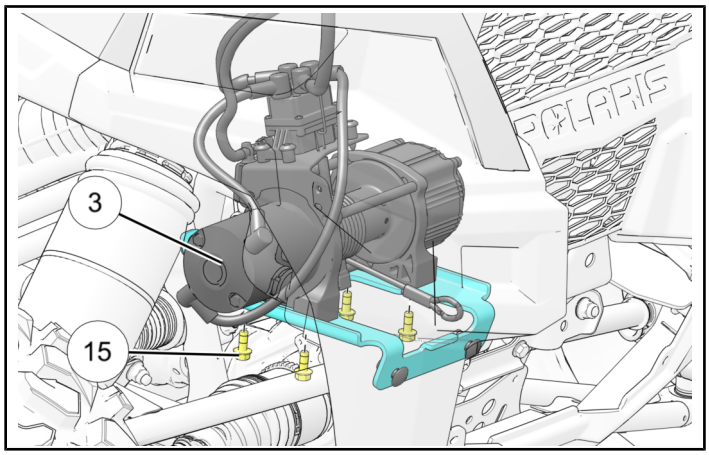

5. **INSTALL FAIRLEAD ASSEMBLY.**

   a. Install fairlead ⑤ to fairlead mounting bracket ④ using the provided screws ⑬ and locking nuts ⑱.

TORQUE
16 ft. lbs. (21.7 Nm)

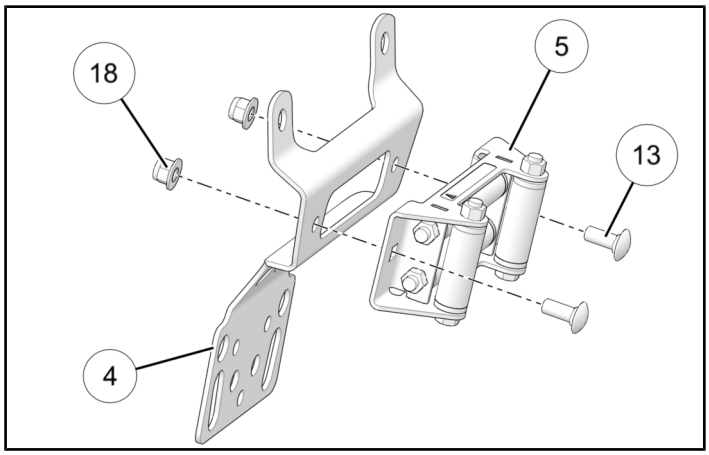

   b. Install fairlead mount bracket ⑧ with fairlead to suspension bracket with four screws ⑨ and nuts ⑦ as shown.

TORQUE
24 ft. lbs. (32.5 Nm)

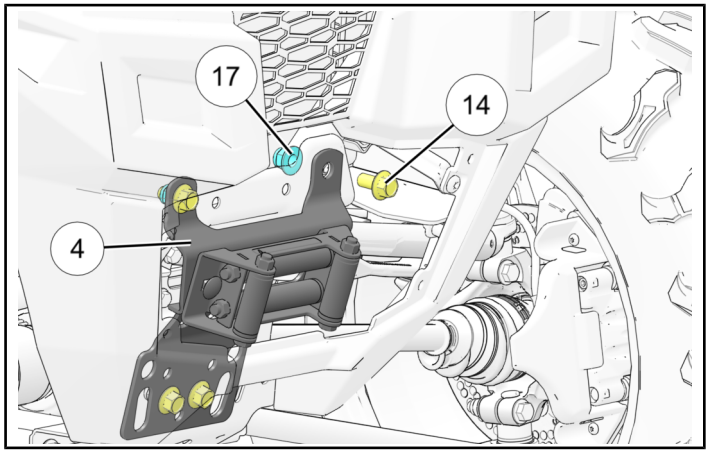

6. **INSTALL WINCH HOOK.**

   a. Shift winch into “neutral” and pull rope/cable ⑨ 6-12" (15-30 cm) out through fairlead. Install hook ⑥ to the rope/cable by inserting clevis pin through hook and rope/cable and securing with a cotter pin.

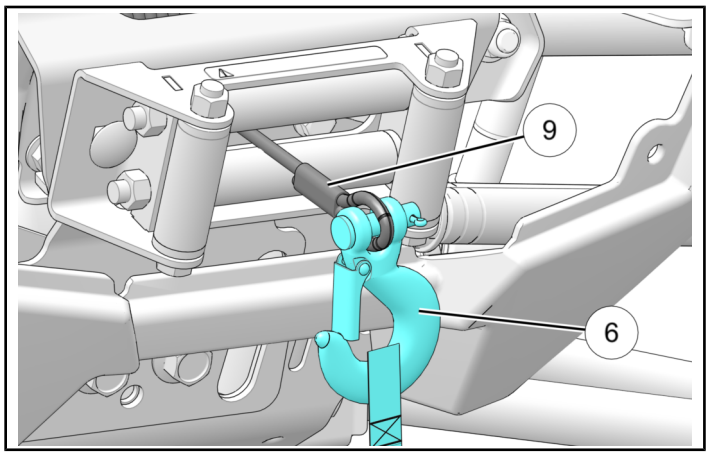

7. **INSTALL DASH SWITCH.**

   a. Remove dash switch panel Ⓐ by gently pulling out along the edges. Once dash panel is out, remove switch plug Ⓑ.

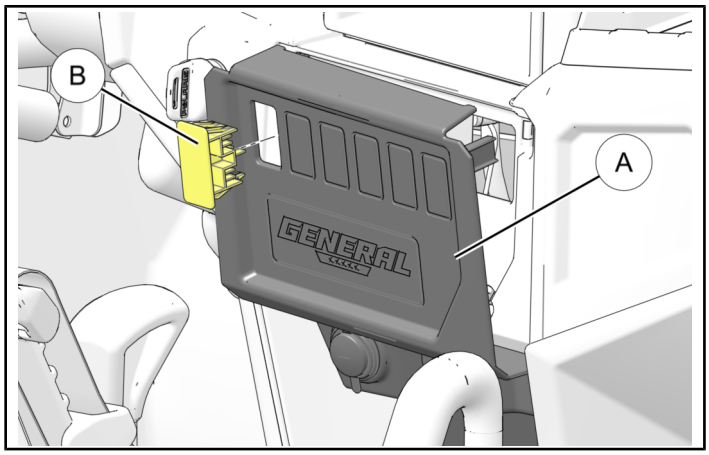

   b. Install dash switch ② into the mounting hole by pressing the switch firmly into position until it is fully seated as shown.

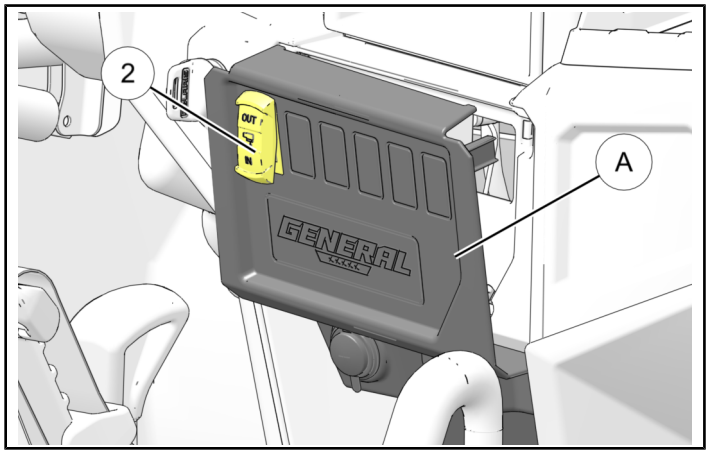

8. **CONNECT ALL ELECTRICAL COMPONENTS.**

NOTE

Refer to the Electrical Connection Reference Guide section at the back of the instruction manual for images and detailed harness connection illustrations to aid in the remaining electrical connections.

IMPORTANT

When making connections, ensure all wires are routed and secured with cable ties away from all heat sources, moving components and sharp edges. Failure to do so may cause damage to electrical wires and/or underlying components which may cause the winch to malfunction.

   a. Locate the dash switch connector (12F) and connect it to the dash switch ② as shown. Once connected, reinstall dash switch panel by aligning all mounting tabs with corresponding slots and firmly press back into the original position.

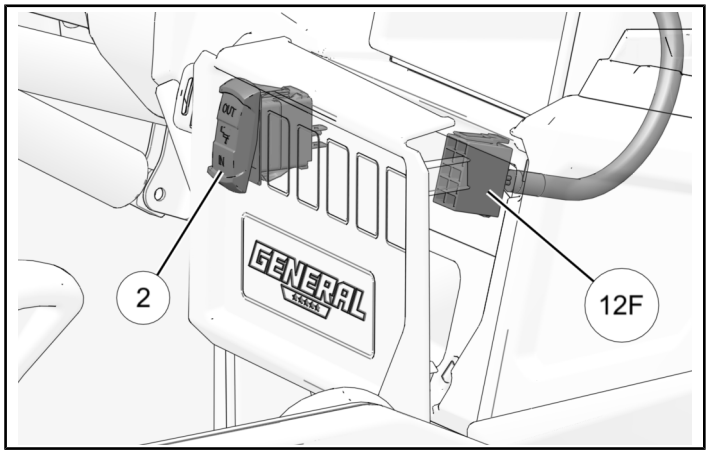

   b. Locate the winch contactor connector (12D) and connect it to the control box connector (12E) located towards the rear right hand side of the winch.

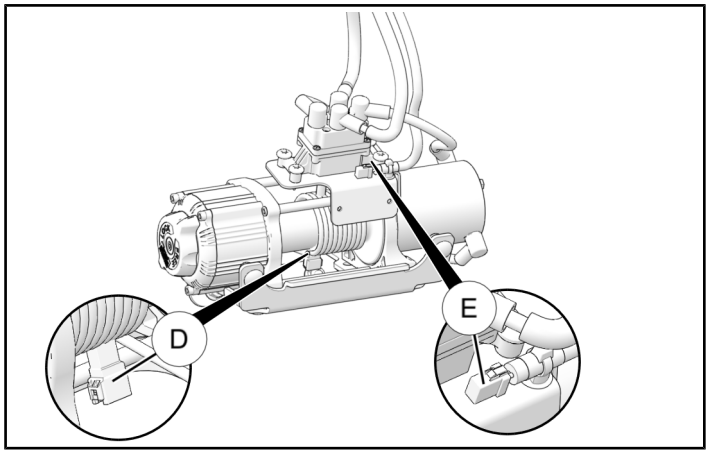

c. Next connect the pulse bar dash switch connector (12A) to the pulse bar connection Ⓐ as shown. For MY19 and newer vehicles skip step 8c and proceed to step 8d.

NOTE

For MY18 and older vehicles that are equipped with a busbar style electrical power distribution strip you will also need to connect the busbar adapter. Refer to the image and procedures outlined in step 8d for busbar connections.

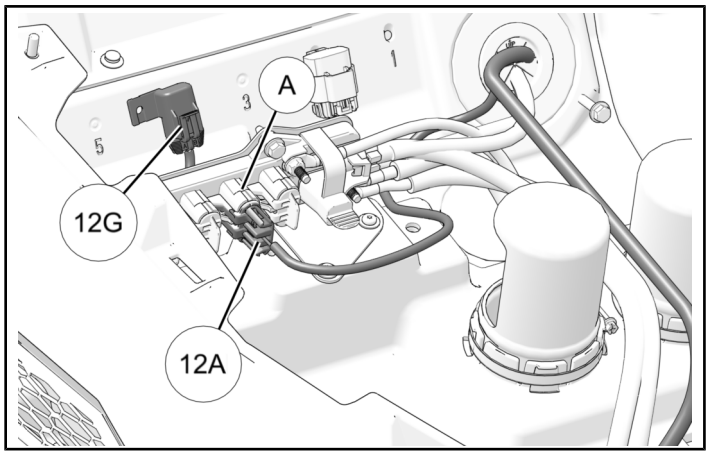

d. For vehicles with a busbar you will need to first remove the cable connection nut Ⓔ from the keyed power terminal Ⓑ and install the orange wired terminal (1B) on the busbar harness adapter onto the keyed power terminal Ⓑ of the busbar. Reinstall the cable connection nut Ⓔ and torque to specification provided.

TORQUE

36 in. lbs. (4.1 Nm)

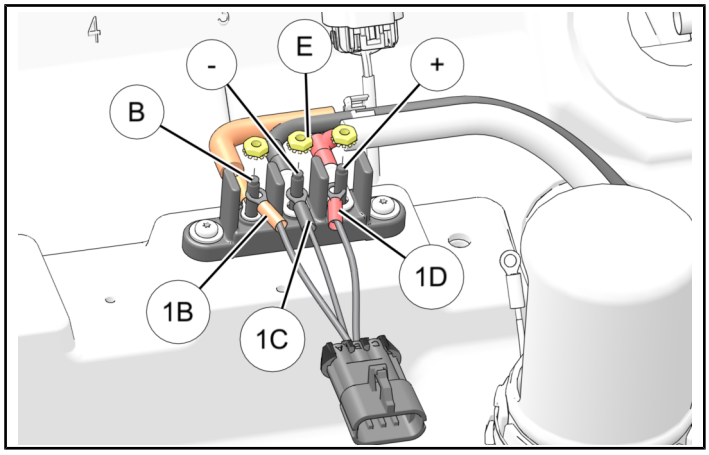

Remove the cable connection nut Ⓔ from the negative terminal on the busbar and install the black wired terminal (1C) on the busbar harness adapter onto the negative terminal of the busbar and loosely reinstall the cable connection nut Ⓔ.

Next, remove the cable connection nut from the positive terminal on the busbar and install the red wired terminal (1D) on the busbar harness adapter onto the positive terminal of the busbar and loosely reinstall the cable connection nut Ⓔ.

e. Route the fuse block (12G) behind the pulse bar/busbar and fasten to firewall by using a drill and 1/ 4” drill bit to drill out the dimpled hole location as shown in image 8c.

f. Connect the red positive (+) and black negative (–) power cables to the corresponding positive (+) and negative (–) terminals on the pulse bar or busbar.

MY 19 and newer vehicle use the provided cable connection nuts ⑯ to secure the power cables in place as shown below. Torque to specification provided.

TORQUE
24 in. lbs. (2.8 Nm)

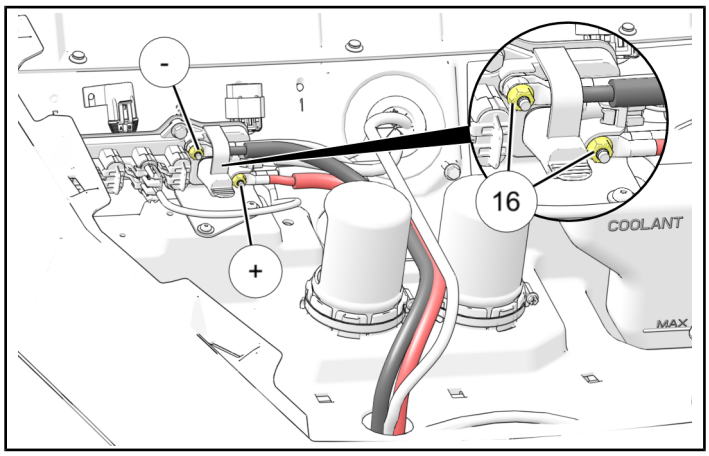

MY18 and older you will need to route and secure the red positive (+) and black negative (–) power cables with the existing cable connection nuts to the corresponding positive (+) and negative (–) busbar terminals as shown in the image below. Torque all nuts to specification provided.

TORQUE
36 in. lbs. (4.1 Nm)

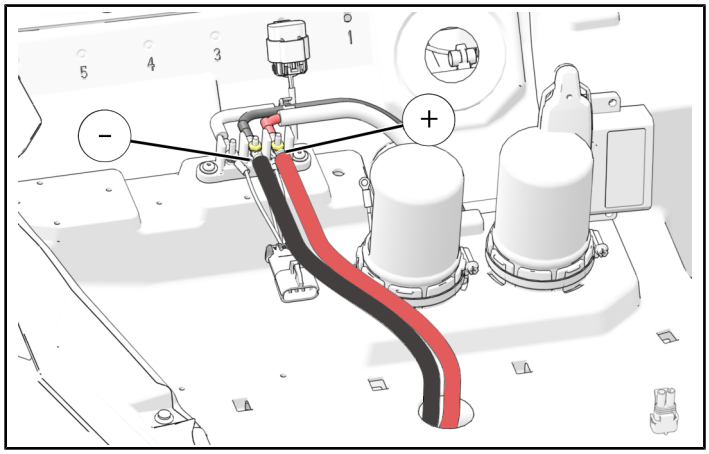

g. Ensure all wires are secured in place away from all moving parts, sharp edges and heat sources with provided cable ties.

9. **CONNECT BATTERY.**

⚠ WARNING

When BOTH battery cables are disconnected **ALWAYS** reconnect AND tighten red positive (+) cable to battery **FIRST**. Failure to do so will result in a high current electrical arc, and may result in battery explosion, if tool touches grounded frame. Death or serious personal injury may occur.

a. Reinstall red positive (+) cable to positive (+) battery terminal.

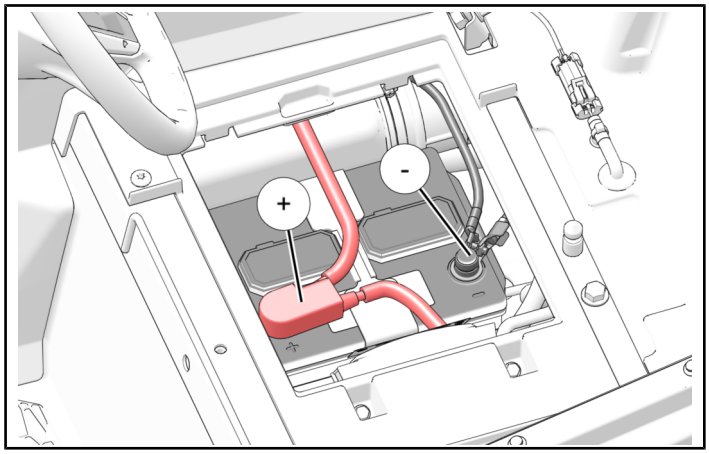

b. Reinstall black negative (–) cable to negative (–) battery terminal.

c. Reinstall battery access panel Ⓒ.

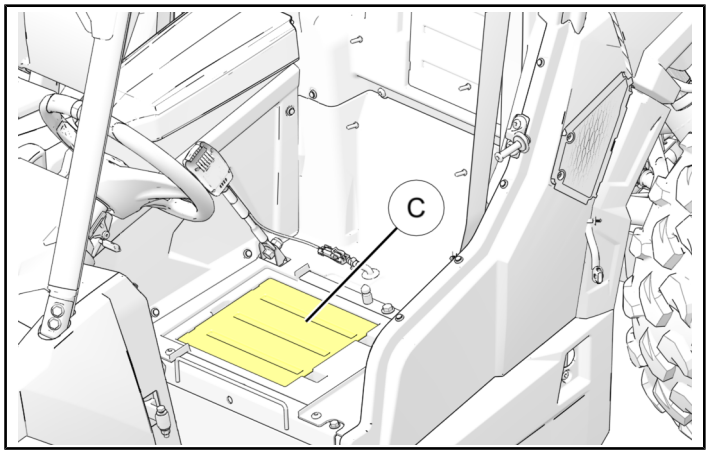

10. **REINSTALL SEAT.**

a. Lift the driver side seat latch Ⓐ located behind seat bottom and firmly press down on seat bottom to reinstall the driver seat Ⓑ. Once installed, pull forward on the seat back to ensure the seat is fully latched and secured into position.

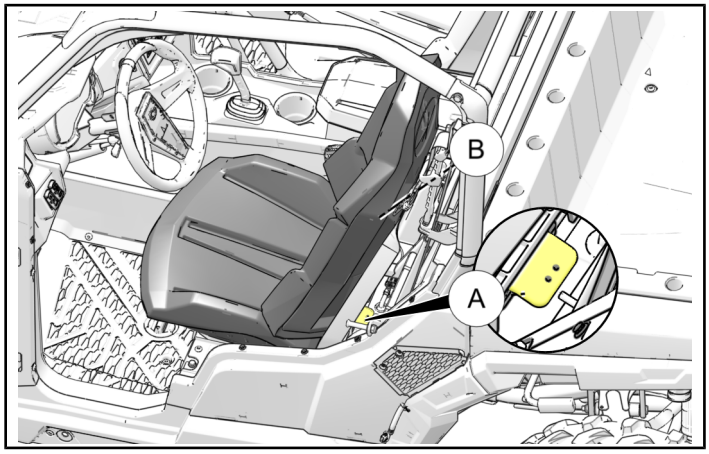

11. **REINSTALL WINCH COVER.**

a. Reinstall lower front winch cover Ⓐ with the previously removed four push pin rivets Ⓑ.

12. **REINSTALL HOOD.**

a. Place hood into position and rotate the two hood latches to secure into position.

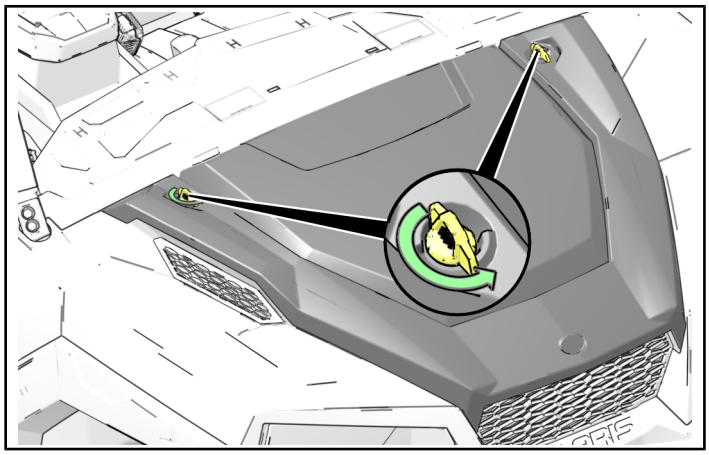

13. **VERIFY WORK.**

a. Confirm all electrical wires/connections have been routed and connected per instructions.

b. Confirm that there are no exposed wires or terminals.

c. Ensure all loose wires are secured away from moving parts, sharp edges and heat sources.

14. **VERIFY WINCH FUNCTION.**

⚠ WARNING

BEFORE testing winch function, read the Operator's Manual that came with your winch. **ALWAYS** abide by ALL safety warnings and operating procedures outlined in the Operator's Manual. Failure to comply may result in serious injury or death.

a. With the vehicle key in the "ON" position, check winch for proper operation using the installed dash switch.

i. Shift winch from "FREE" to "LOCK" and verify proper function.

WINCH OPERATION

GEAR SELECTION

The Polaris 4500 HD winch is equipped with two different gear settings. “FREE” and “LOCK”.

⚠ WARNING

DO NOT attempt to shift the winch while the rope/cable is under tension. **ALWAYS** make sure the winch rope/cable is not in tension before shifting the winch between gears to avoid damage to the winch mechanism. Failure to comply may lead to death or serious personal injury

- The “FREE” setting is meant to be used to free-spool the winch rope/cable for faster deployment. To shift into “FREE”, rotate the gear selection handle counter-clockwise.
- The “LOCK” position is meant to be used when winching is required or to retract the cable/rope back onto the winch spool. To shift into “LOCK”, rotate the gear selection handle clockwise.

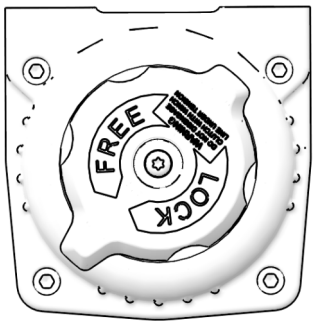

WIRELESS REMOTE OPERATION *(IF EQUIPPED)*

NOTE

The remote will automatically turn itself off after 30 seconds of inactivity. You will therefore need to turn the remote back on if it has been more than 30 seconds since the prior use.

- When properly installed, the wireless remote will allow you to operate the winch from off the vehicle, which can be a safe way to operate the winch when done properly.
- To turn on the wireless remote, hold the small "On/Off" button for three seconds or until the LED light on the remote turns on. If the vehicle is on so that the winch is receiving power, the wireless remote should operate the winch as if you were using the winch switch located on the handlebar. If the remote is not operating properly, see the troubleshooting information at the end of the instructions.
- To manually turn off the remote, hold the small "On/Off" button for 3 seconds or until the LED light turns off. The remote will automatically turn itself off after 30 seconds of inactivity.
- See the illustration below for proper wireless remote operation.

AUTOSTOP OPERATION *(IF EQUIPPED)*

- The Autostop system is meant to help prevent damage to the winch system from over-tightening of the rope/cable, but is not meant to prevent all foreseeable winch damage. The winch is very powerful and care should be exercised whenever it is in operation. The winch operator is always responsible for using the winch properly and the Autostop system should only be used as a secondary preventive measure to help prevent damage to the winch from over-tightening the rope/cable.
- The Autostop system works when the black rubber puck nears the aluminum fairlead. Stop magnets in the puck trigger sensors in the fairlead, which prevent the contactor from pulling in the winch rope/cable any further. During final inspection, confirm that the Autostop is functioning properly.
- Troubleshooting steps are given in that section to help diagnose and correct any problems.

TROBLESHOOTING

SYMPTOM	POSSIBLE CAUSES	RECOMMENDED SOLUTION
Dead vehicle battery	Incorrect, damaged, or corroded electrical connections	Verify all winch electrical connections are per instruction manual and free of damage and/or corrosion.
Winch will not operate	Contactor not receiving power	Turn vehicle key on.
	Wireless remote not powered on	Turn wireless remote on.
	Incorrect, damaged, or corroded electrical connections	Verify all winch electrical connections are per instruction manual and free of damage and/or corrosion.
	Keyed power circuit (orange wires) not properly powered	Check 10A accessory circuit fuse for continuity; replace as required.
Winch operates in one direction only	Autostop fairlead not properly connected	If winch operates only outward then ensure magnetic stop (black rubber puck) is not touching autostop fairlead. If winch operates inward even when magnetic stop is touching fairlead then verify all winch electrical connections are per instruction manual and free of damage and/or corrosion.
Winch makes noise but rope does not move	Contactor powered, but not winch	If clicking sound is heard when winch control button is depressed, but winch motor is silent, then verify electrical connections between winch and contactor are free of damage and/or corrosion. If winch makes noise but does not move, verify winch is in gear. If winch is in gear, but winch still does not move, have a dealer inspect the winch.
	Winch not in proper gear	Rotate gear knob fully into L or H, then recheck.
Winch operates too slowly	Winch is improperly loaded	Verify rope/cable is not binding on spool or fairlead.
Winch will not change gears	Rope/cable is under load	Changing gears while under load is intentionally difficult to prevent accidental operation, which could lead to personal injury or winch failure. Ensure rope is under no tension, and rope is not binding on spool or fairlead. Briefly operate winch, then attempt to shift again.

SERVICE KITS

Winch Hardware Kit: PN 2206300

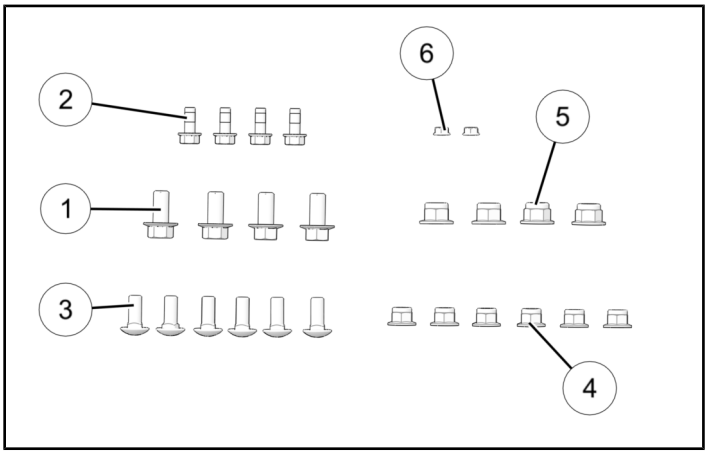

REF	QTY	PART DESCRIPTION
1	4	Screw, HXFL - M12 X 1.75 X 25
2	4	Screw, HXFL M8 X 1.25 X 20
3	6	Screw, Carriage - M10 X 1.5 X 25
4	6	Locking Nut - M10 X 1.5
5	4	Locking Nut - M12 X 1.75
6	2	Hex Nut - M6 , Serrated

HD Service Handle Kit: PN 2205265

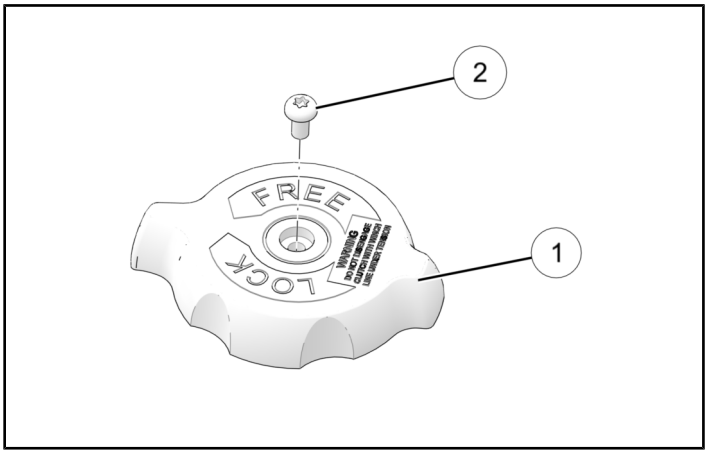

REF	QTY	PART DESCRIPTION
1	1	4500 HD Service Handle
2	1	Mounting Screw

Autostop Service Kit: PN 2881288

NOTE

The Autostop kit is compatible with the Polaris 4500 HD winch kit and is available for purchase separately.

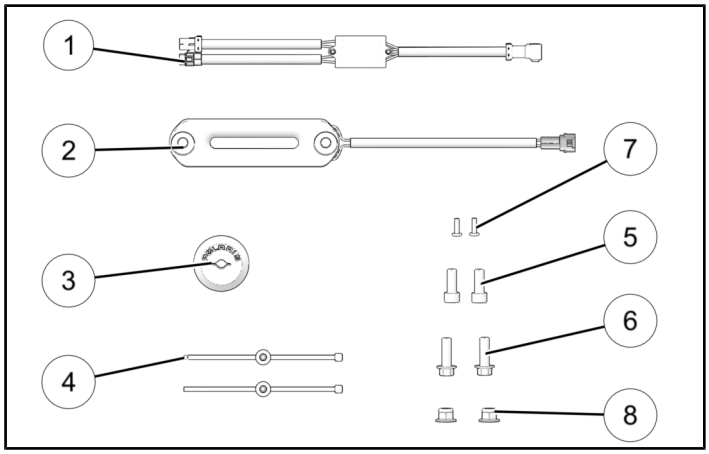

REF	QTY	PART DESCRIPTION
1	1	Control Box
2	1	Autostop Fairled
3	1	Rubber Puck
4	2	Routing Clip
5	2	Screw, SH - M10 X 1.5 X 25
6	2	Screw, HXFL - M10 X 1.5 X 30
7	2	Screw, TRX - #10 X 5/8
8	2	Locking Nut, M10 X 1.5

Universal Wireless Remote Kit: PN 2881287

NOTE
The Universal Wireless Remote kit is compatible with the Polaris 4500 HD winch kit and is available for purchase separately.

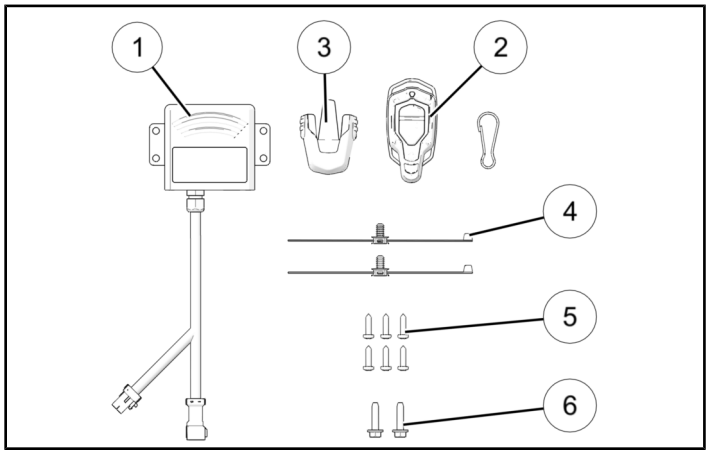

REF	QTY	PART DESCRIPTION
1	1	Wireless Receiver
2	1	Wireless Remote
3	1	Wireless Remote Holder
4	2	Routing Clip
5	6	Screw - #10 x 3/4
6	2	Screw - M6 X 1.0 X 25

ELECTRICAL REFERENCE GUIDE

Harness Adapter Detail (MY18 and older)

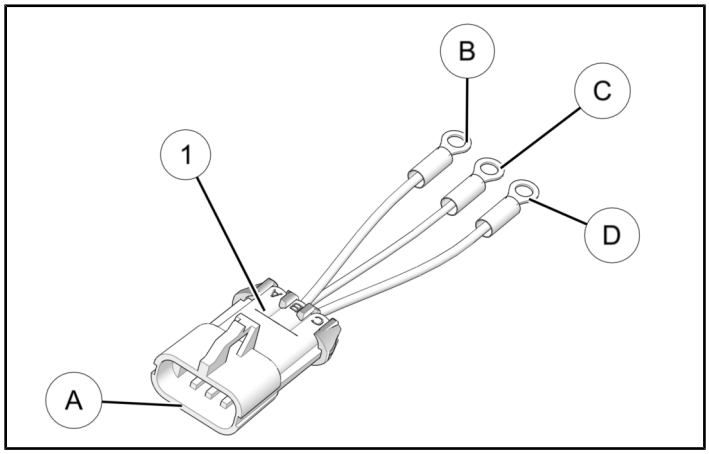

Winch Harness Detail

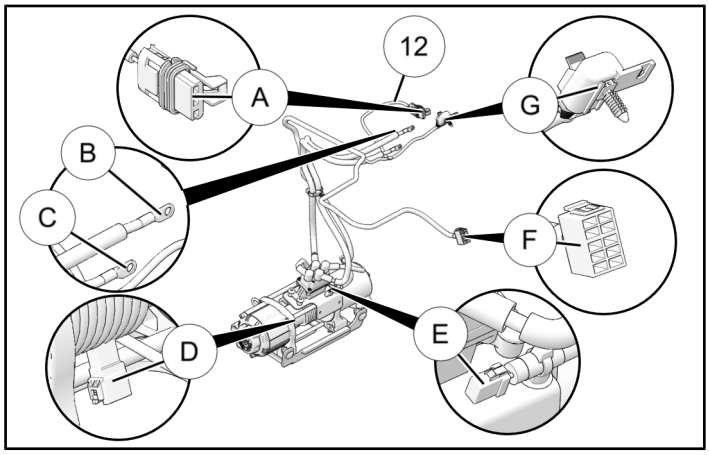

FEEDBACK FORM

A feedback form has been created for the installer to provide any comments, questions or concerns about the installation instructions. The form is viewable on mobile devices by scanning the QR code or by clicking **HERE** if viewing on a PC.

FEEDBACK FORM