GRIPS KIT

P/N 2882828, 2883268

APPLICATION

Verify accessory fitment at www.indianmotorcycle.com.

BEFORE YOU BEGIN

Read these instructions and check to be sure all parts and tools are accounted for. Please retain these installation instructions for future reference and parts ordering information.

REQUIRED SOLD SEPARATELY

Only parts for installation of the Indian Motorcycle® Grips Kit are included. For complete installation, the following additional kit is required (sold separately):

- *Adhesive Kit*, P/N 2883462

KIT CONTENTS

GRIPS KIT, P/N 2882828

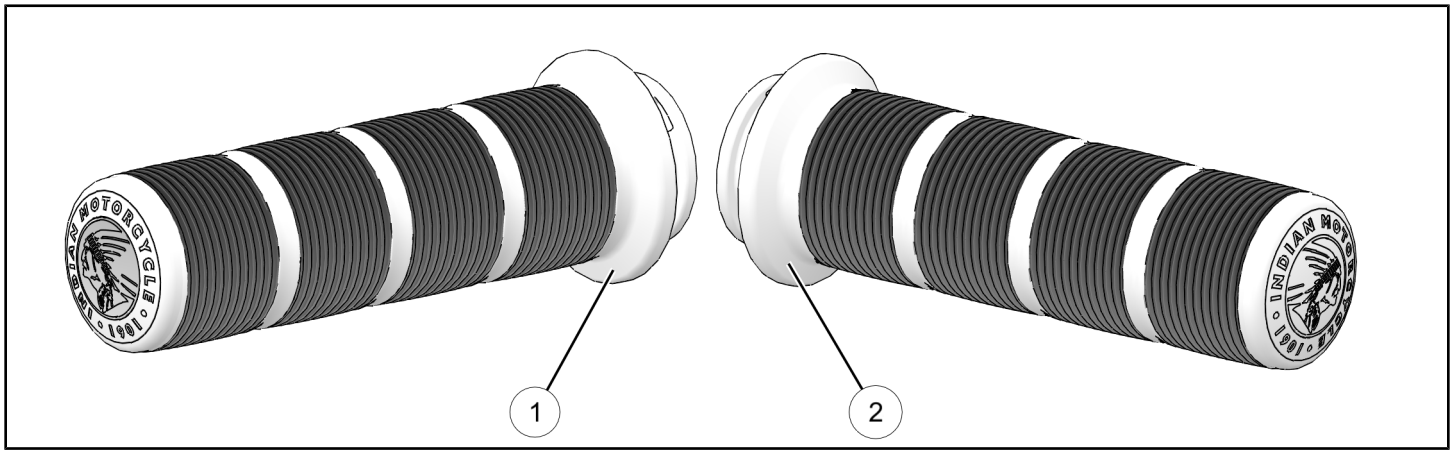

NOTE
XXX = Indian Motorcycle® color code (For example: 266 = Black)

REF	QTY	PART DESCRIPTION	P/N AVAILABLE SEPARATELY
1	1	Grip, Left-Hand	2636682-XXX
2	1	Grip, Right-Hand	2636683-XXX

HEATED GRIPS KIT, P/N 2883268

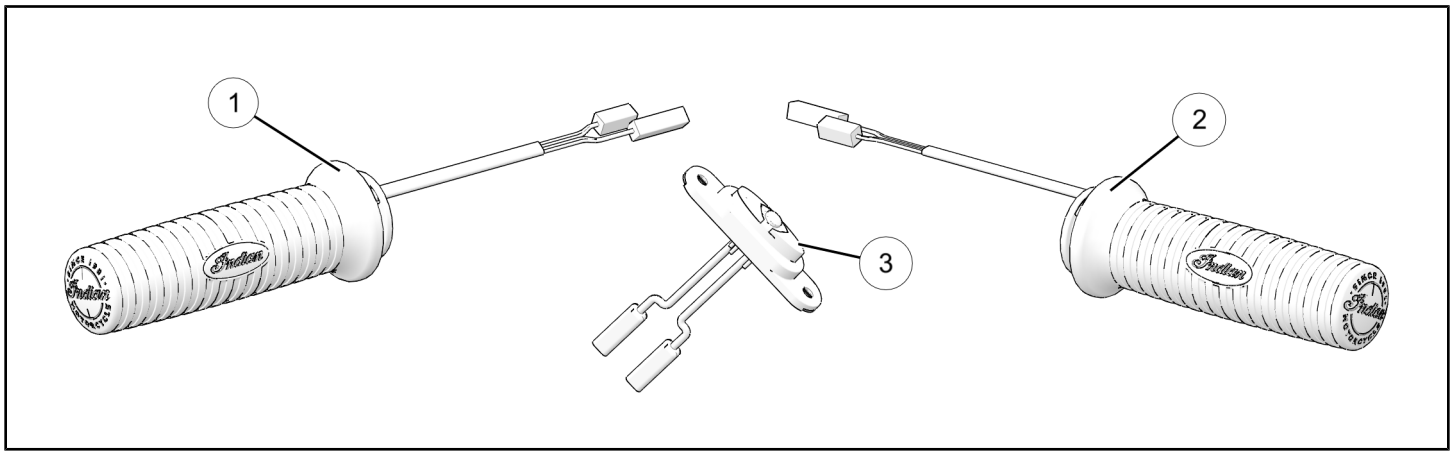

REF	QTY	PART DESCRIPTION	P/N AVAILABLE SEPARATELY
1	1	Grip, Left-Hand, Heated	5416282
2	1	Grip, Right-Hand, Heated	5416650
3	1	Switch, Heated Grips	4015738

TOOLS REQUIRED

- Safety Glasses
- Hammer, Soft Face
- Pick and Hook Set
- Socket Set, Hex Bit, Metric
- Socket Set, Torx® Bit
- Torque Wrench
- Wrench, Adjustable, 10 in
- Wrench, Strap

CONSUMABLES REQUIRED

- Adhesive Remover (Goo Gone® or 3M™ Citrus Base)

IMPORTANT

Your Indian Motorcycle® Grips Kit is exclusively designed for your vehicle. Please read the installation instructions thoroughly before beginning. Installation is easier if the vehicle is clean and free of debris. For your safety, and to ensure a satisfactory installation, perform all installation steps correctly in the sequence shown.

INSTALLATION INSTRUCTIONS

VEHICLE PREPARATION

GENERAL

1. Turn key or ignition switch to OFF position and remove key. If equipped with keyless fob, remove fob from proximity of vehicle.
2. Ensure motorcycle is parked on a flat surface, kickstand is fully extended, and vehicle is stable prior to installation.

ACCESSORY INSTALLATION

LEFT-HAND GRIP REMOVAL

1. Loosen, but do not remove, two fasteners on clutch lever assembly.

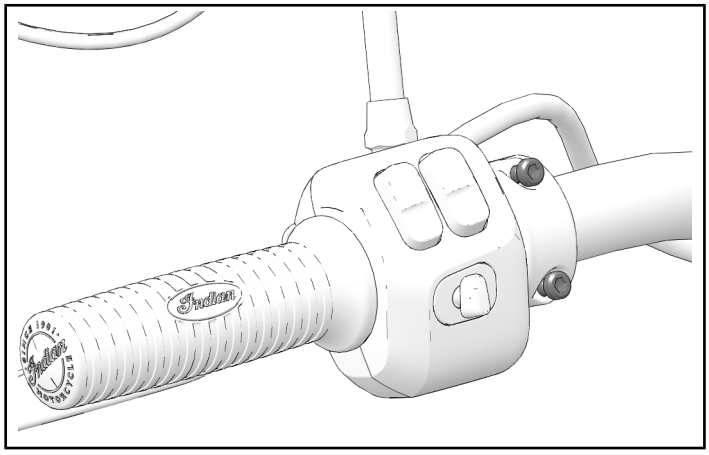

2. Slide and rotate clutch lever assembly to access outer cube fasteners. Use extra caution moving clutch lever assembly. Clutch lever wire is still connected to switch cube.

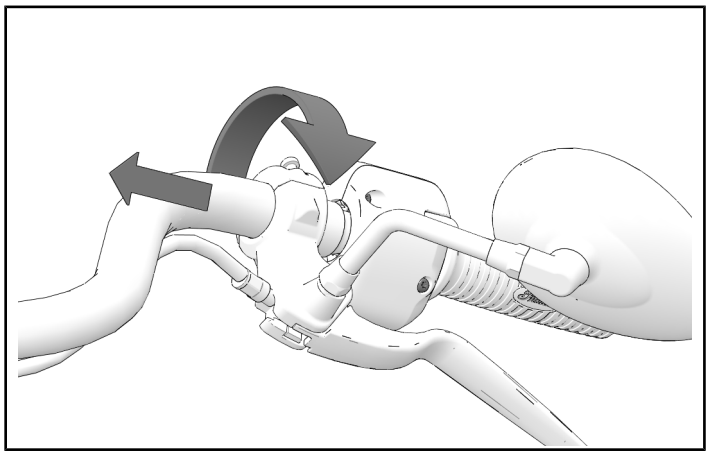

3. Remove two outer cube fasteners and remove two halves of cover.

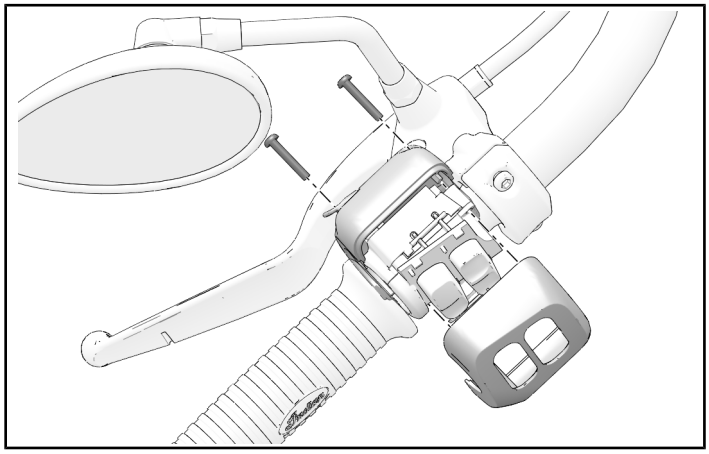

4. Use a small pick to release retaining tab and disconnect clutch lever wire

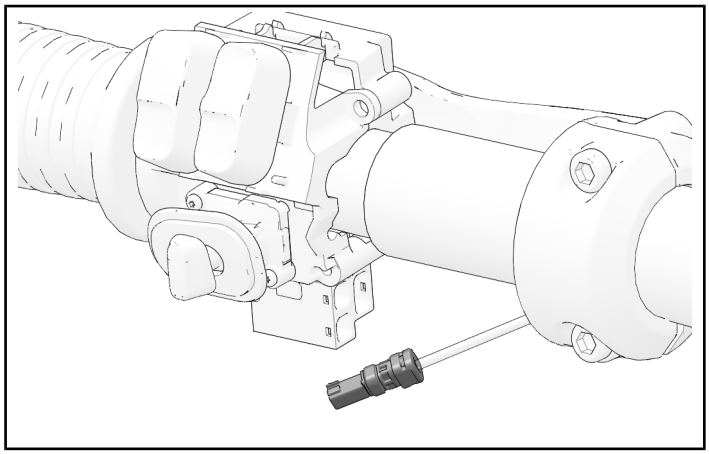

5. Remove two clutch lever assembly fasteners. Carefully let clutch lever assembly hang by clutch cable.

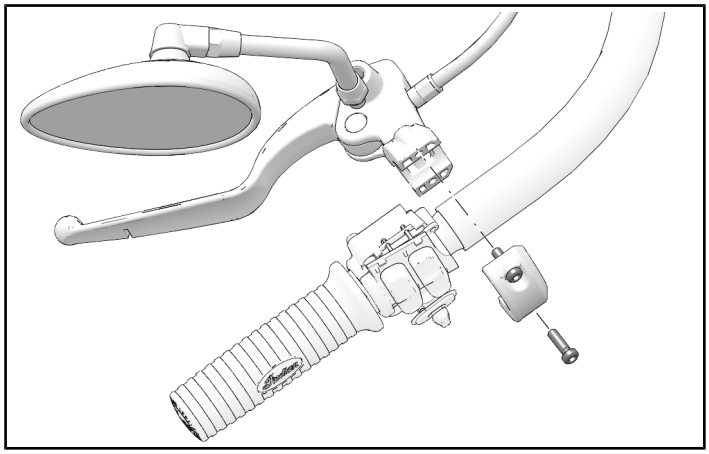

6. Remove two inner cube fasteners. Rotate switch side upward and remove entire assembly. Remaining connectors may stay connected as long as switch cube is supported.

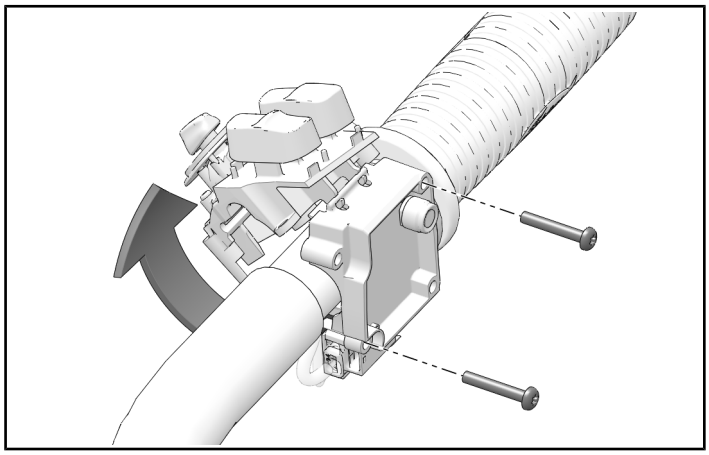

7. Place rubber strap wrench around grip and twist grip to break adhesive free. Use caution to not damage OEM grip. Twist grip back and forth while pulling outward.

TIP
Use a soft hammer to move wrench handle, if needed.

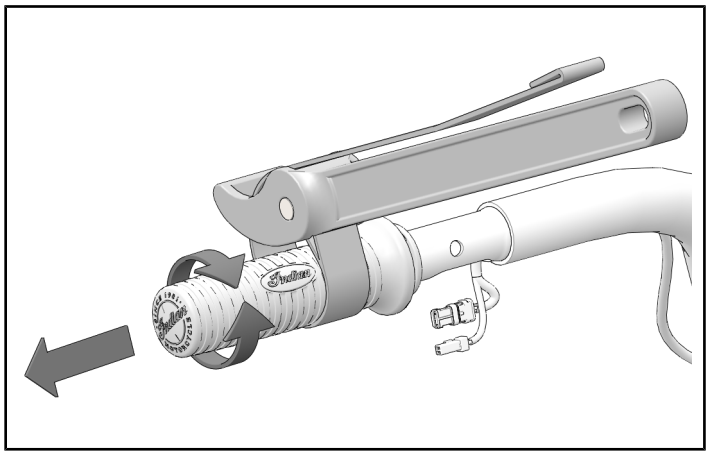

8. Use adhesive remover to clean adhesive residue or grip material from handlebar.

⚠ WARNING
Follow all chemical manufacturer instructions and safety precautions. Failure to follow all manufacturer instructions and precautions may result in severe injury or death.

LEFT-HAND GRIP INSTALLATION

LEFT-HAND GRIP INSTALLATION

1. Slide left grip onto handlebar while handlebar is clean and dry. Install inner portion of switch and align grip. Hold grip in place, remove switch and make a mark on handlebar aligned with tab on grip shown with arrow. Remove switch cube and grip.

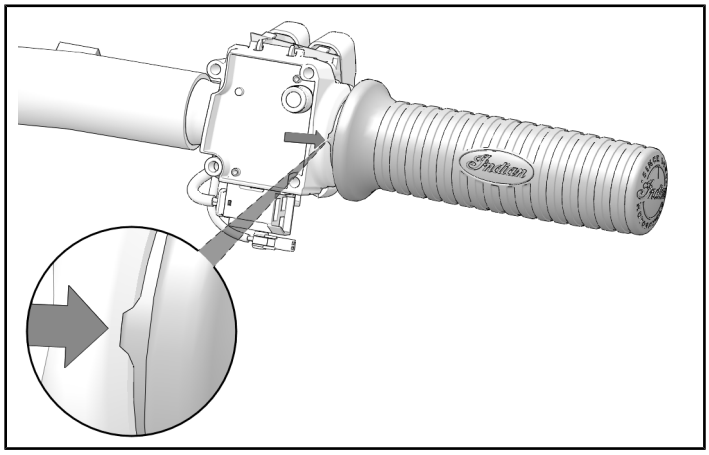

2. Spray three sprays worth of primer into grip opening and allow 5 minutes for primer to dry.

IMPORTANT
The next three steps need to be completed quickly. Once adhesive dries, grip cannot be adjusted.

3. Apply a thick bead of adhesive (15 mm) into grip 360° around inside of grip. Spin left-hand grip onto handlebar until grip bottoms out against handlebar end. Quickly rotate grip so headdress faces forward and tab is aligned with mark made in previous step. Clean any excess glue from handlebar or grip after grip is fully seated.

TIP
Use *Required Sold Separately* kit. *Adhesive Kit*, P/N 2883462

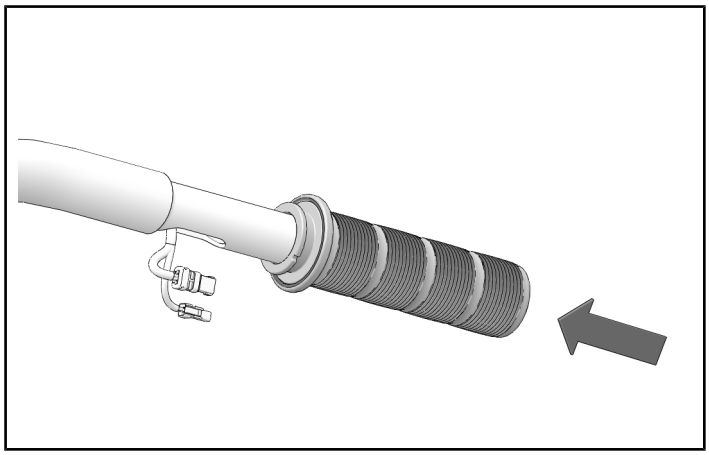

4. Quickly orient inner switch cube so pin is inserted into handlebar. Ensure to line up slots on left-hand grip to inner switch cube, as shown.

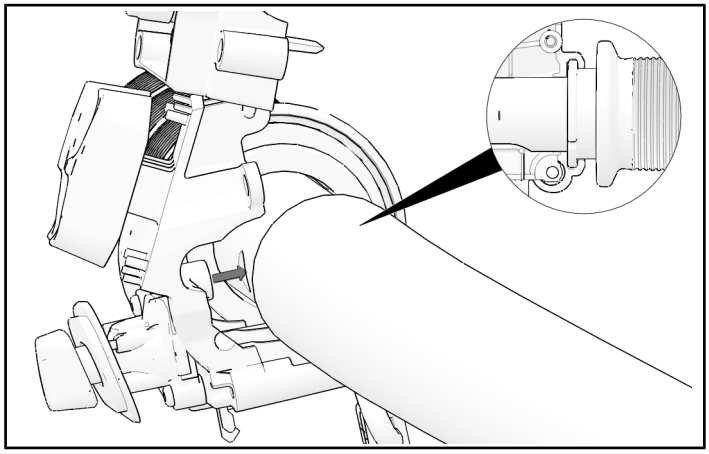

5. Quickly secure outer switch cube with two retained fasteners. Switch cube assembly notch should fit over tab on grip flange as shown with arrow. Rotate and adjust grip to fit properly.

TORQUE
Inner Cube Fasteners: **7 in-lbs (1 N·m)**

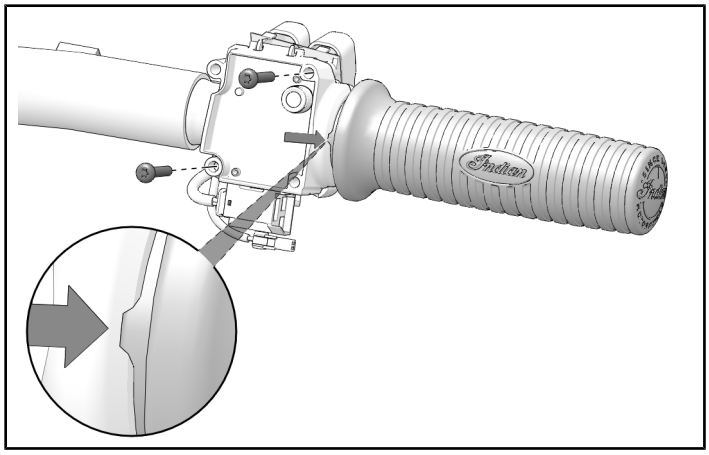

6. Loosely reinstall clutch lever assembly using two retained fasteners.

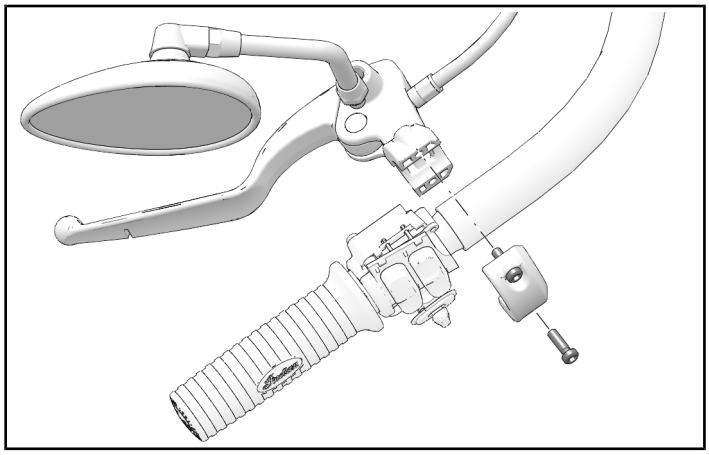

7. Connect clutch wire connector to switch cube assembly.

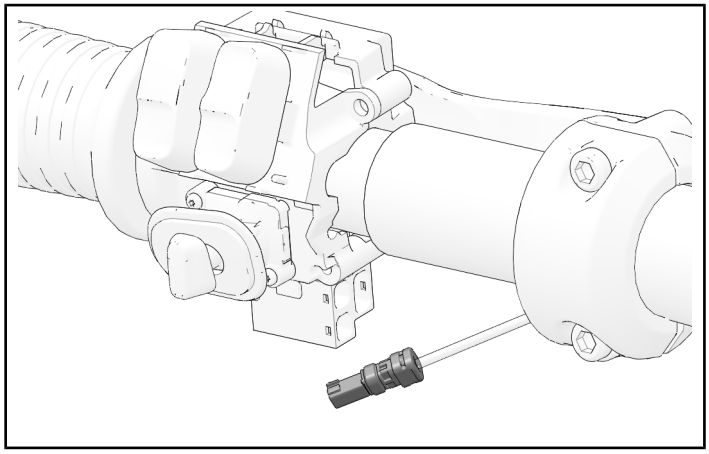

8. Reinstall left-hand switch cube cover using two retained fasteners. Ensure that all wiring is contained within switch cube. Ensure clutch wire is not pinched by two cube covers. Torque fasteners to specification.

TORQUE
Outer Cube Fasteners: **7 in-lbs (1 N·m)**

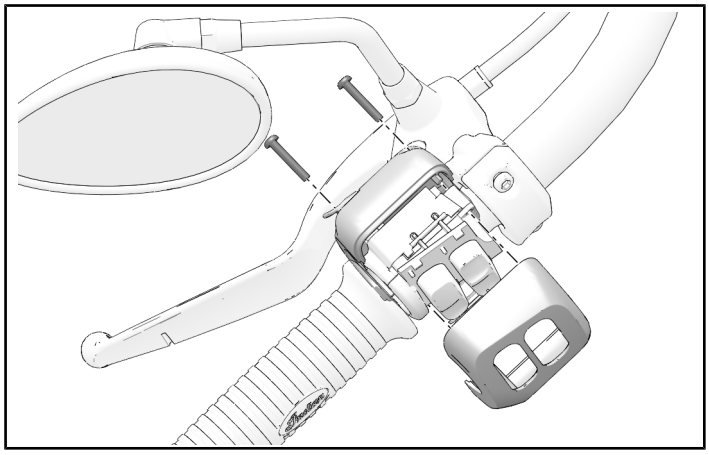

9. Align clutch handle assembly and beginning with top fastener, torque two fasteners to specification.

TORQUE
Clutch Lever Assembly Fasteners: **70 in-lbs (8 N·m)**

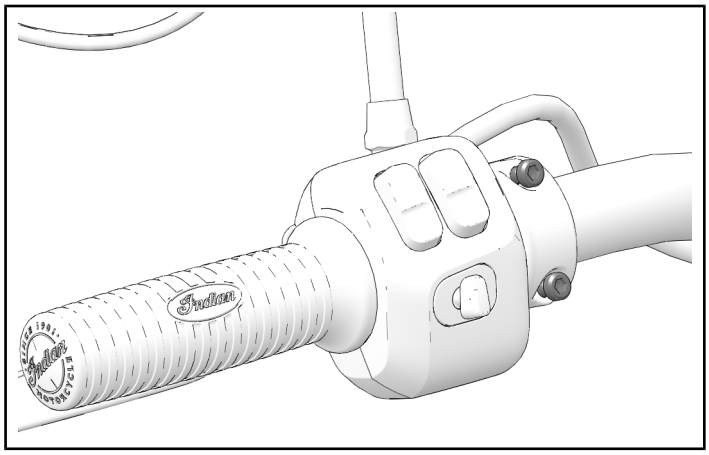

IMPORTANT
Allow motorcycle to sit for a period of 24 hours to allow glue to dry and set properly.

LEFT-HAND HEATED GRIP INSTALLATION

1. Slide left grip onto handlebar while handlebar is clean and dry. Install inner portion of switch and align grip. Hold grip in place, remove switch and make a mark on handlebar aligned with tab on grip shown with arrow. Remove switch cube and grip.

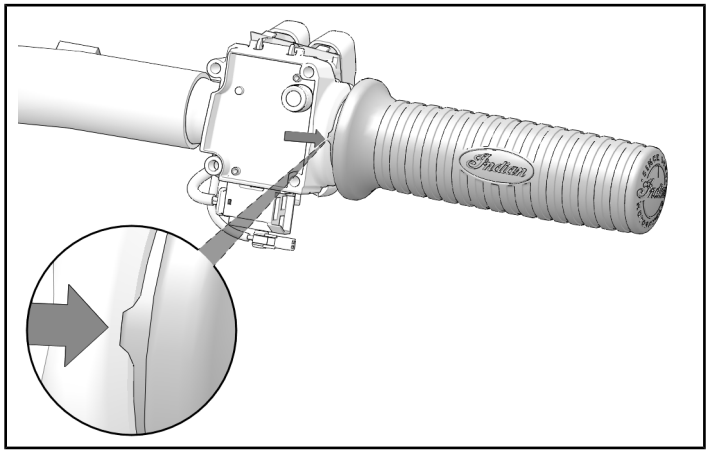

2. Spray three sprays worth of primer into grip opening and allow 5 minutes for primer to dry.

IMPORTANT
The next four steps need to be completed quickly. Once adhesive dries, grip cannot be adjusted.

3. Apply a thick bead of adhesive (15 mm) into grip 360° around inside of grip. Spin left-hand grip onto handlebar until grip bottoms out against handlebar end. Quickly rotate grip so headdress faces forward and tab is aligned with mark made in previous step. Clean any excess glue from handlebar or grip after grip is fully seated.

TIP
Use *Required Sold Separately* kit. *Adhesive Kit*, P/N 2883462

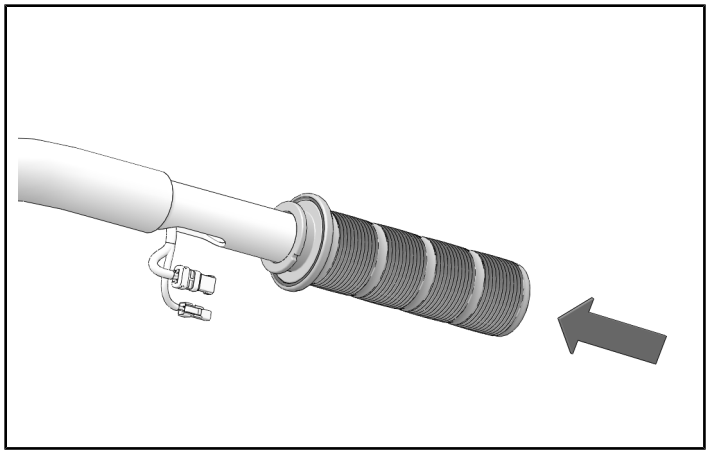

4. Quickly orient inner switch cube so pin is inserted into handlebar. Ensure to line up slots on left-hand grip to inner switch cube, as shown.

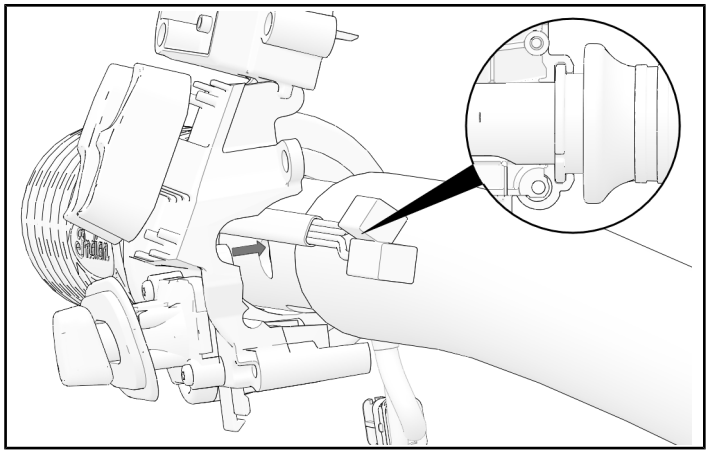

5. When inner switch cube is closed, heated grip wire should exit opening shown with arrow.

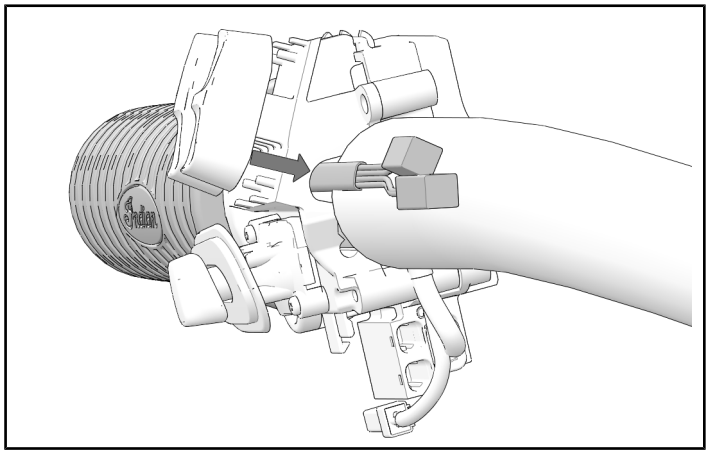

6. Quickly secure outer switch cube with two retained fasteners. Switch cube assembly notch should fit over tab on grip flange as shown with arrow. Rotate and adjust grip to fit properly.

TORQUE
Inner Cube Fasteners: **7 in-lbs (1 N·m)**

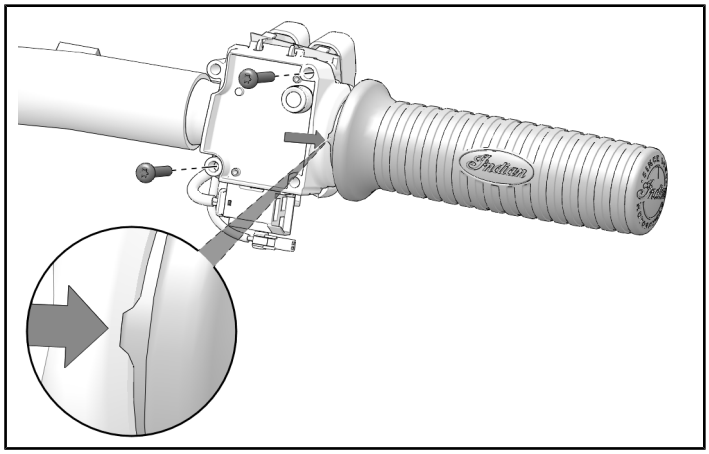

7. Connect heated grip connectors to switch cube assembly and wiring harness as shown.

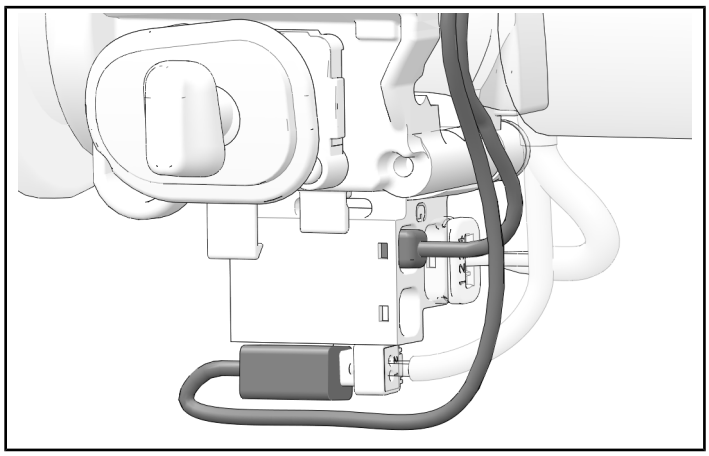

8. Loosely reinstall clutch lever assembly using two retained fasteners.

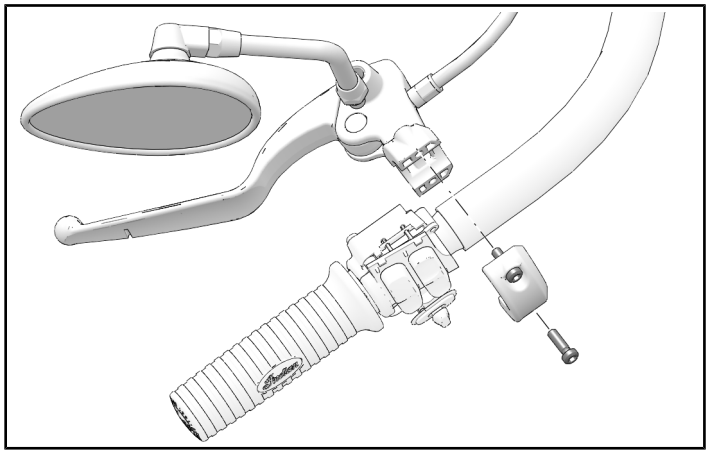

9. Connect clutch wire connector to switch cube assembly.

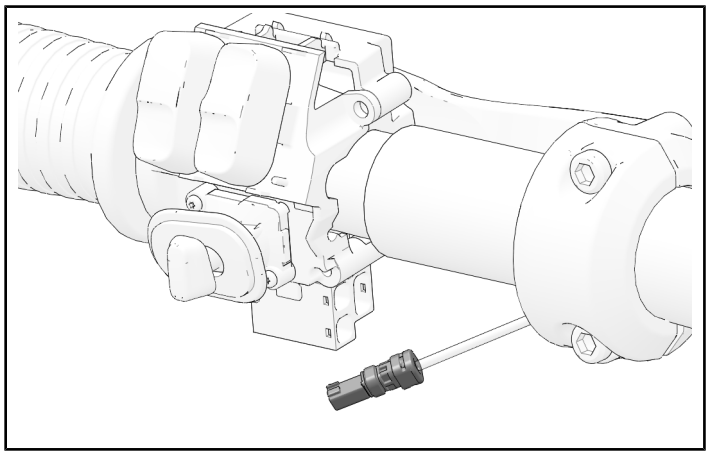

10. Reinstall left-hand switch cube cover using two retained fasteners. Ensure that all wiring is contained within switch cube. Ensure clutch wire is not pinched by two cube covers. Torque fasteners to specification.

TORQUE
Outer Cube Fasteners: **7 in-lbs (1 N·m)**

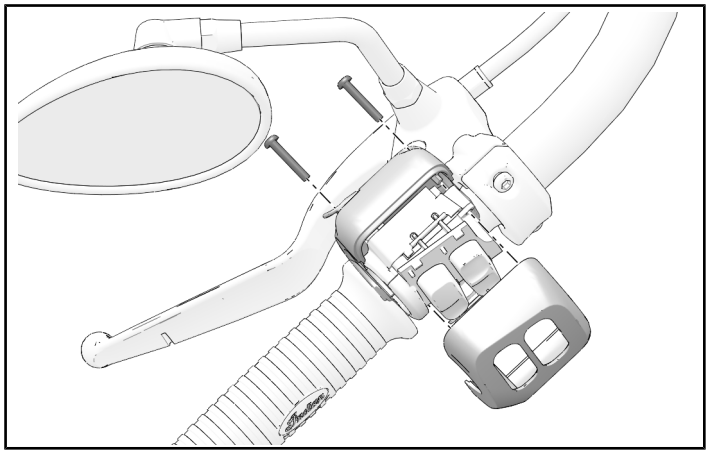

11. Align clutch handle assembly and beginning with top fastener, torque two fasteners to specification.

TORQUE
Clutch Lever Assembly Fasteners: **70 in-lbs (8 N·m)**

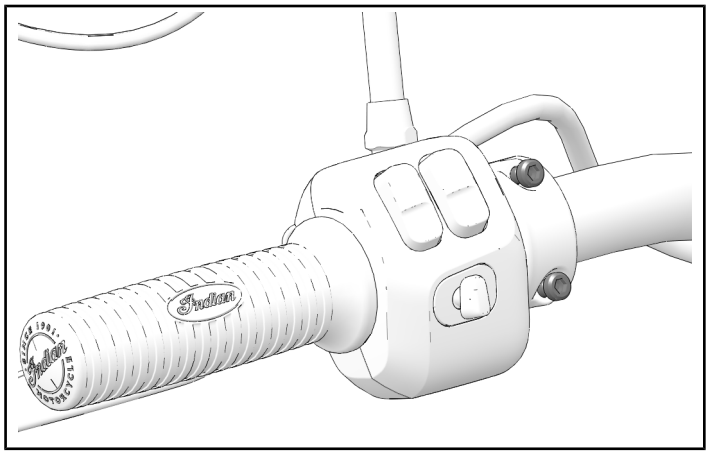

IMPORTANT
Allow motorcycle to sit for a period of 24 hours to allow glue to dry and set properly.

RIGHT HAND GRIP REMOVAL

1. Beginning with lower fastener, remove two fasteners on clutch lever assembly. Carefully hang brake lever assembly.

IMPORTANT
Do not allow hand brake master cylinder to be turned upside down once removed. Bleeding the brakes will be required if master cylinder is turned upside down.

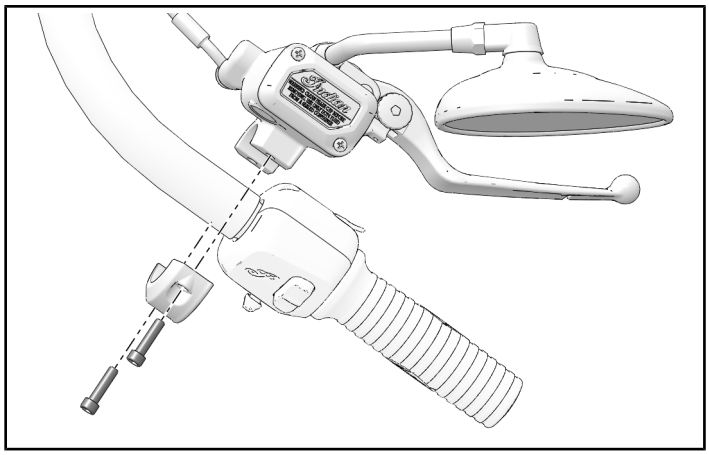

2. Remove two outer cube fasteners and remove two halves of cover.

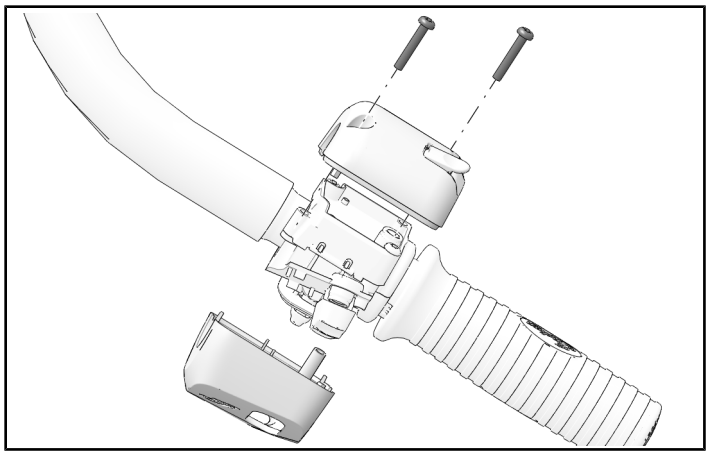

3. Remove two inner cube fasteners. Rotate switch side upward and remove entire assembly. Remaining connectors may stay connected as long as switch cube is supported.

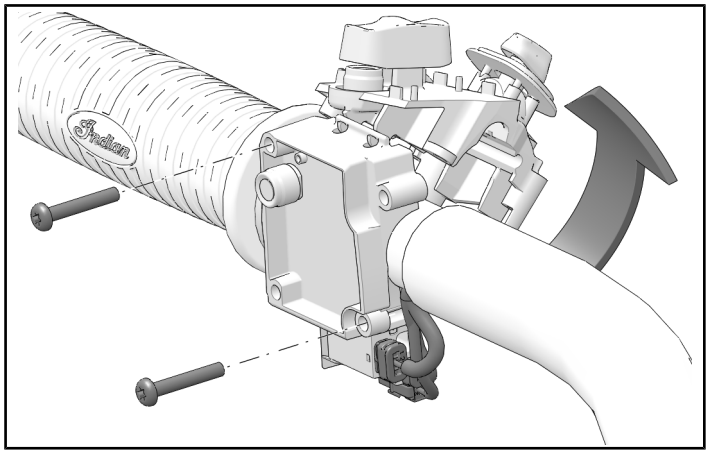

4. Slide and remove right-hand throttle tube/grip from handlebar.

RIGHT-HAND GRIP INSTALLATION

RIGHT-HAND GRIP INSTALLATION

1. Install new right-hand throttle tube/grip onto handlebar.

TIP
Headdress should be facing forward when grip is properly installed. Rotate grip while sliding on to ensure it is fully seated.

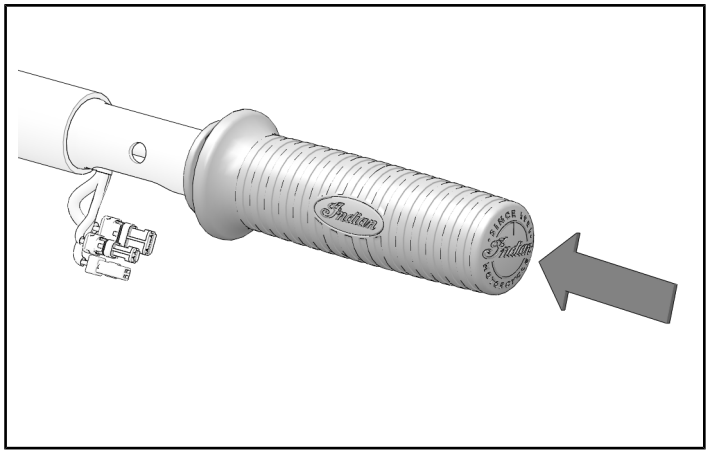

2. Orient inner switch cube so pin is inserted into handlebar. Ensure to line up slots in throttle tube to inner switch cube.

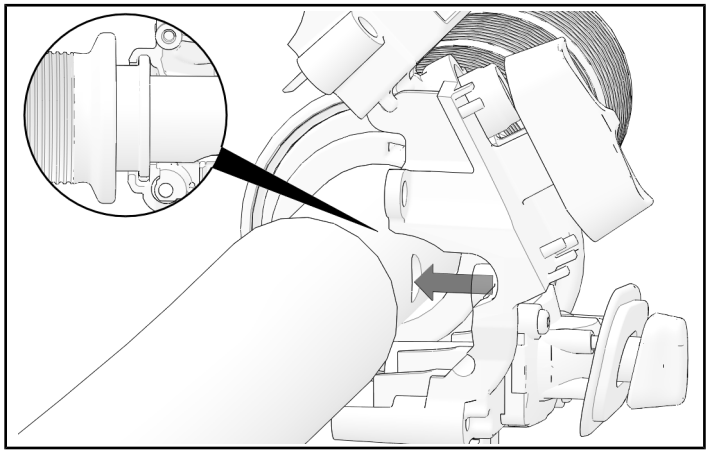

3. Close inner switch cube and reinstall two inner cube fasteners.

TORQUE
Inner Cube Fasteners: **7 in-lbs (1 N·m)**

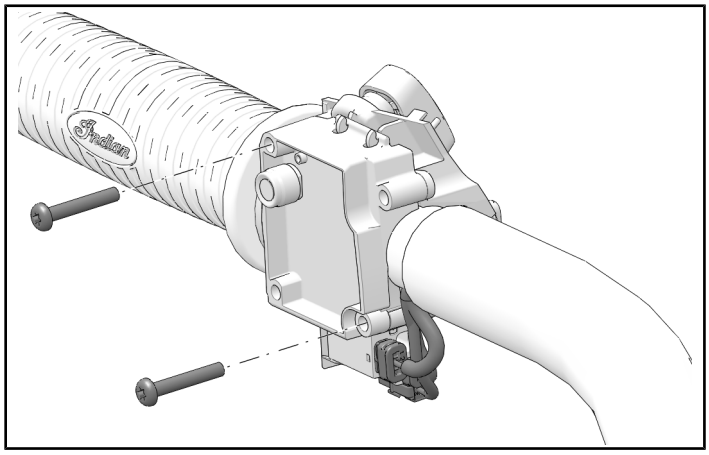

4. Twist throttle fully backward and forward to ensure throttle is properly seated and there is no dragging. If throttle is dragging, repeat previous two steps.

5. Reinstall right-hand switch cube cover using two retained screws. Ensure that all wiring is contained within switch cube. Torque fasteners to specification.

TORQUE
Outer Cube Fasteners: **7 in-lbs (1 N·m)**

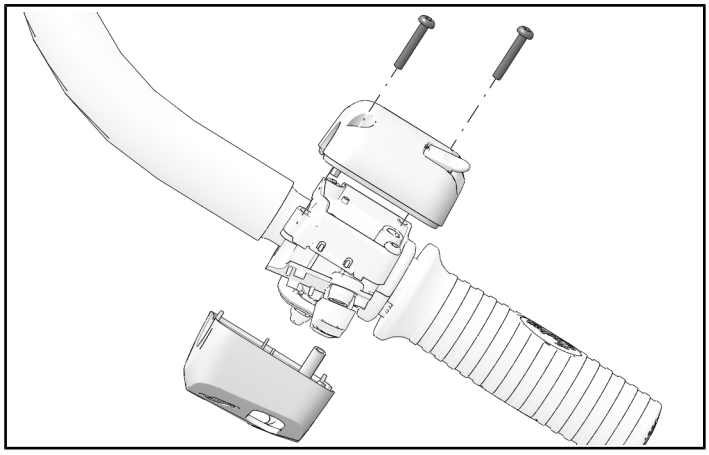

6. Reinstall brake lever assembly using two retained fasteners. Align handle and beginning with top fastener, torque two fasteners to specification.

TORQUE
Brake Lever Assembly Fasteners: **70 in-lbs (8 N·m)**

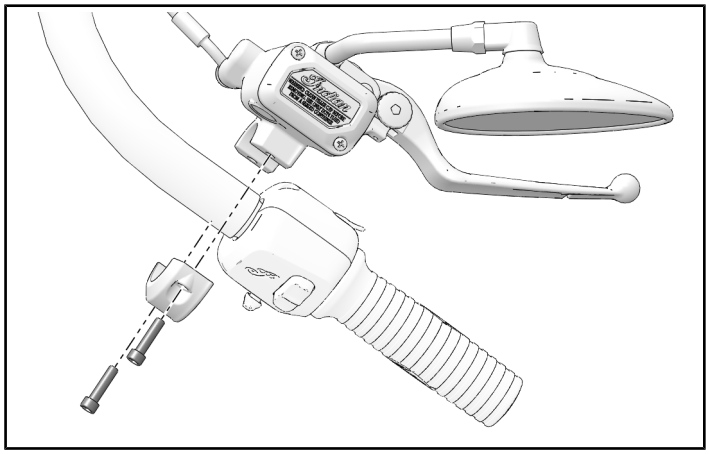

7. Twist throttle fully backward and forward to ensure throttle is properly seated and there is no dragging. If throttle is dragging, repeat installation.

RIGHT-HAND HEATED GRIP INSTALLATION

1. Install new right-hand throttle tube/grip onto handlebar.

TIP
Headdress should be facing forward when grip is properly installed. Rotate grip while sliding on to ensure it is fully seated.

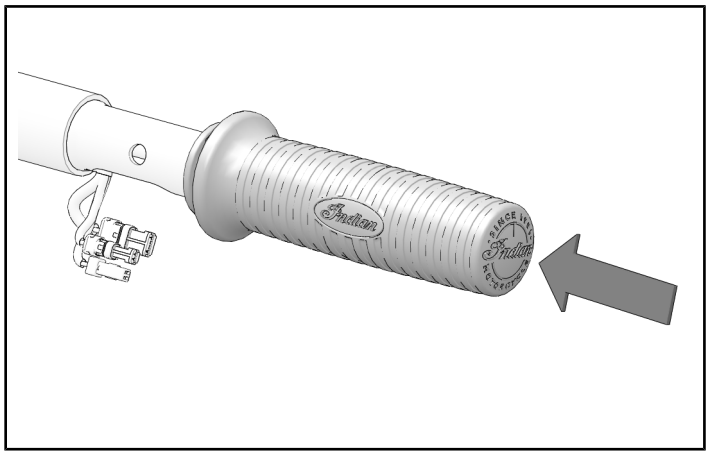

2. Orient inner switch cube so pin is inserted into handlebar. Ensure to line up slots in throttle tube to inner switch cube.

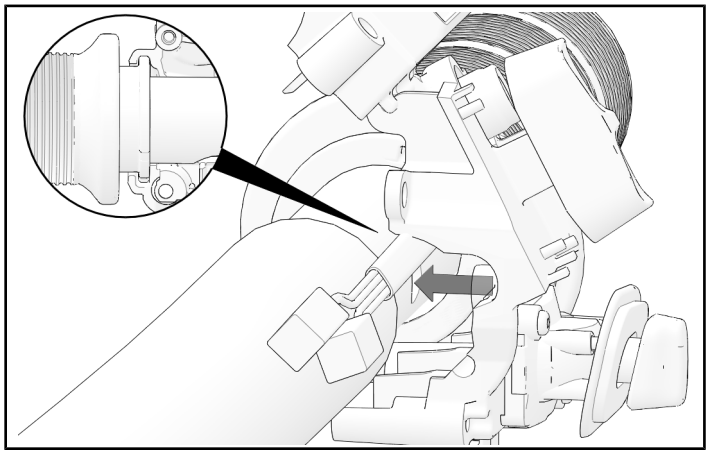

3. When inner switch cube is closed, heated grip wire should exit opening shown with arrow.

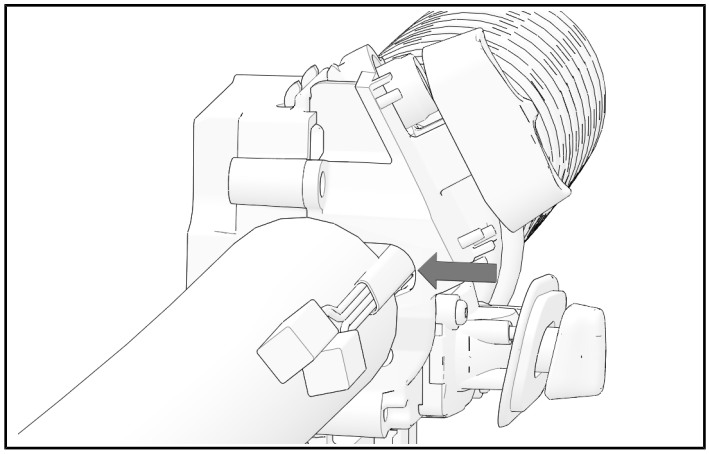

4. Close inner switch cube and reinstall two inner cube fasteners.

TORQUE
Inner Cube Fasteners: **7 in-lbs (1 N·m)**

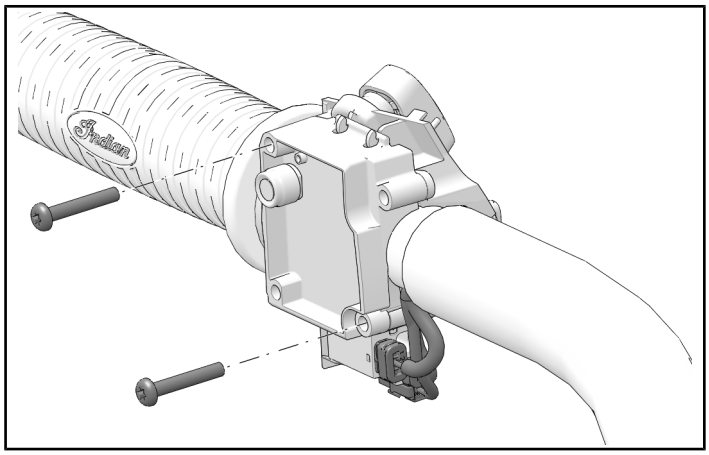

5. Twist throttle fully backward and forward to ensure throttle is properly seated and there is no dragging. If throttle is dragging, repeat previous two steps.
6. Connect heated grip connectors to switch cube assembly and wiring harness as shown.

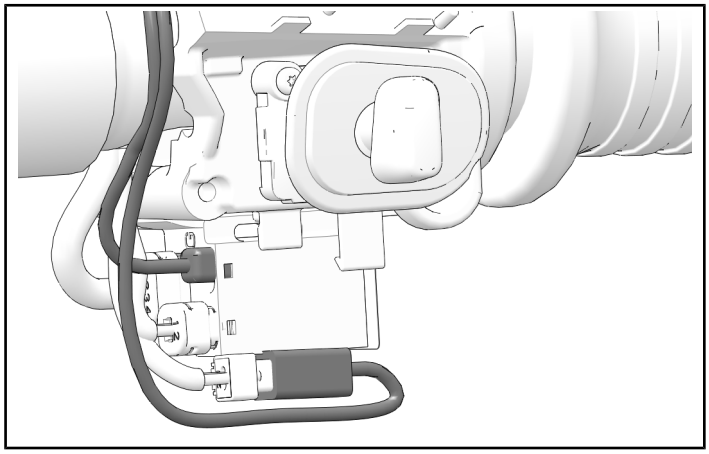

7. Reinstall right-hand switch cube cover using two retained screws. Ensure that all wiring is contained within switch cube. Torque fasteners to specification.

TORQUE
Outer Cube Fasteners: **7 in-lbs (1 N·m)**

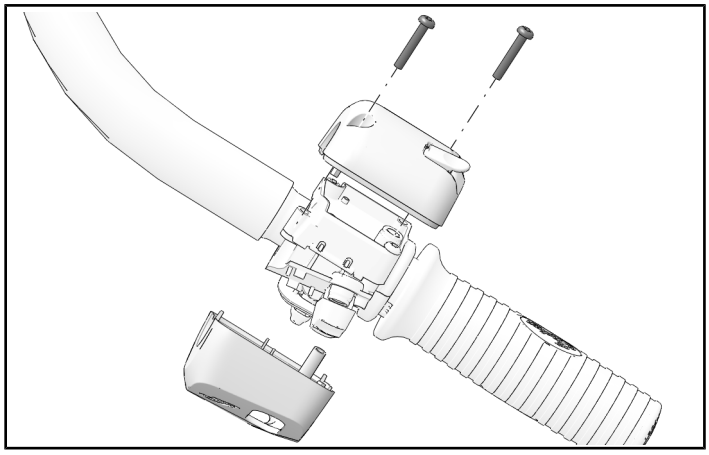

8. Reinstall brake lever assembly using two retained fasteners. Align handle and beginning with top fastener, torque two fasteners to specification.

TORQUE
Brake Lever Assembly Fasteners: **70 in-lbs (8 N·m)**

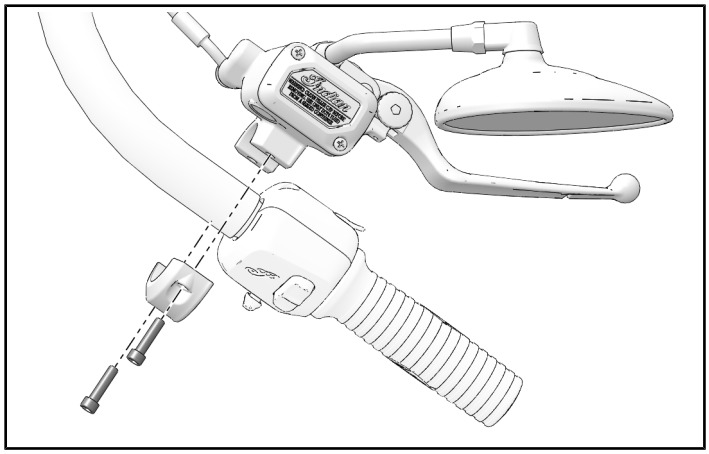

9. Twist throttle fully backward and forward to ensure throttle is properly seated and there is no dragging. If throttle is dragging, repeat installation.

SWITCH INSTALLATION: FORK-MOUNTED FAIRING AND NON-FAIRING

HEATED GRIP SWITCH INSTALLATION

1. Remove and retain tank console fastener(s).

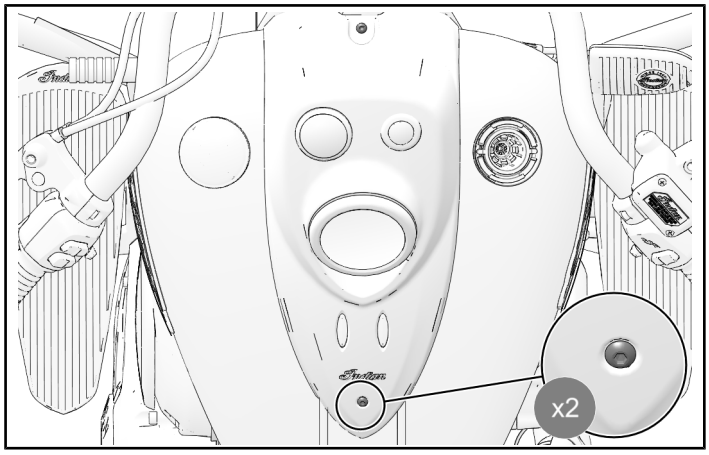

2. Carefully lift tank console from tank, reach under console and disconnect any connectors that may be installed. Carefully set tank console on protective surface

TIP
There may be up to six (6) connectors under tank console, depending on model and features.

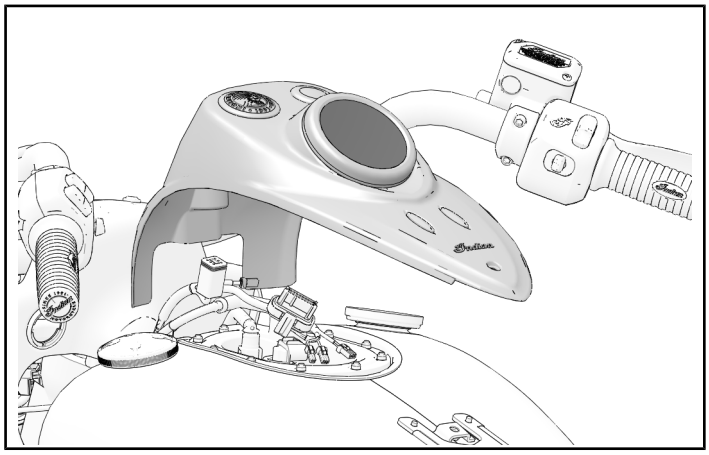

3. Remove and retain two switch fasteners. Remove and discard switch blank.

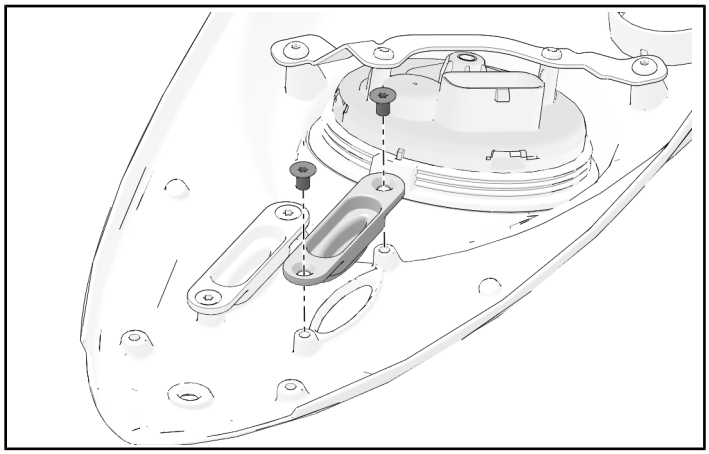

4. Install new switch and secure with two retained switch fasteners.

TORQUE
Switch Fasteners: **20 in-lbs (2 N·m)**

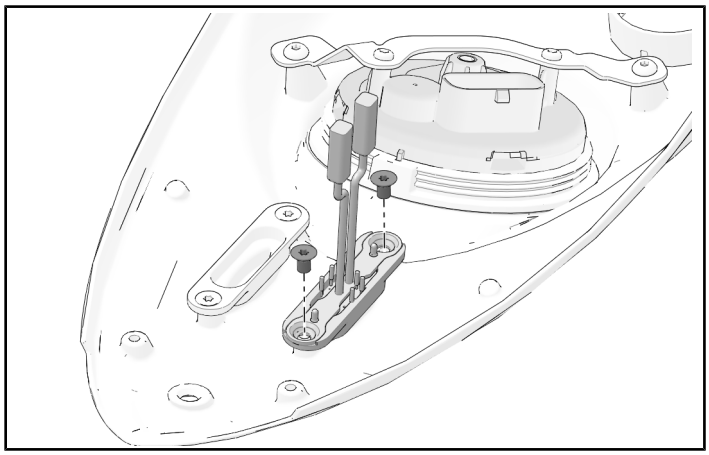

5. Plug heated grip switch connectors into corresponding connectors under console. Reconnect all other connectors under console.

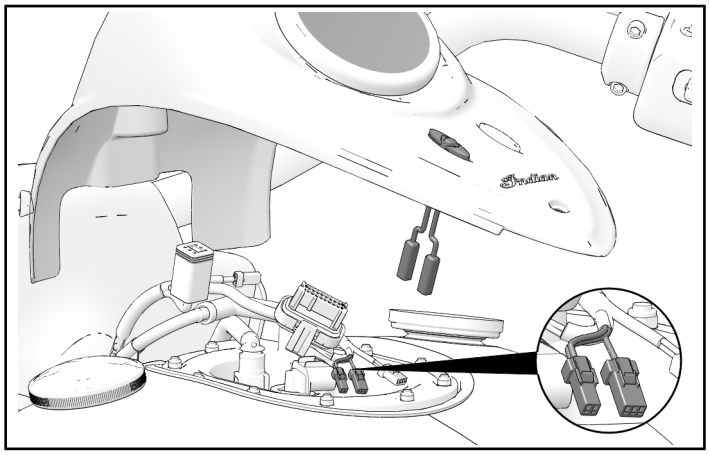

6. Reinstall tank console and secure with retained screws.

TORQUE
Console Cover Fasteners: **84 in-lbs (9 N·m)**

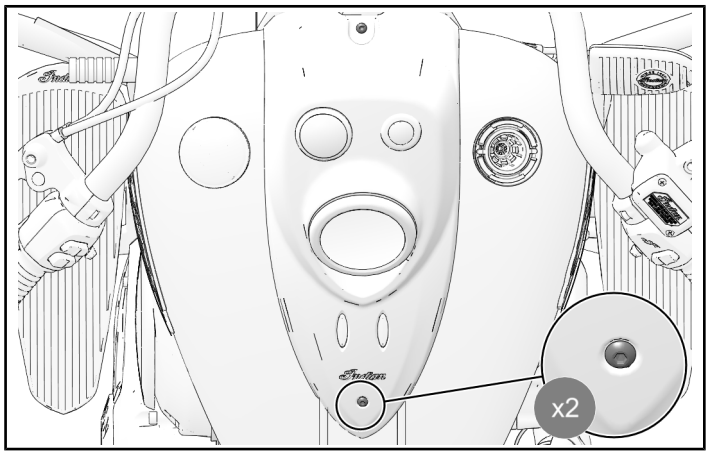

SWITCH INSTALLATION: CHASSIS-MOUNTED FAIRING

OUTER FAIRING REMOVAL

1. Open storage doors Ⓐ and pull out storage liners Ⓑ. Set liners aside.

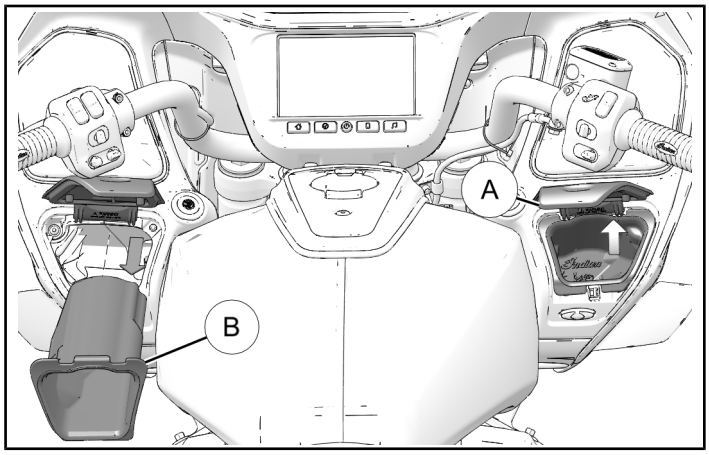

2. Carefully pry along edge with non-marring pry tool to disengage speaker grill assemblies Ⓒ.

TIP
Use Special Tool: Non-marring Pry Tool, P/N 5456907 (or equivalent)

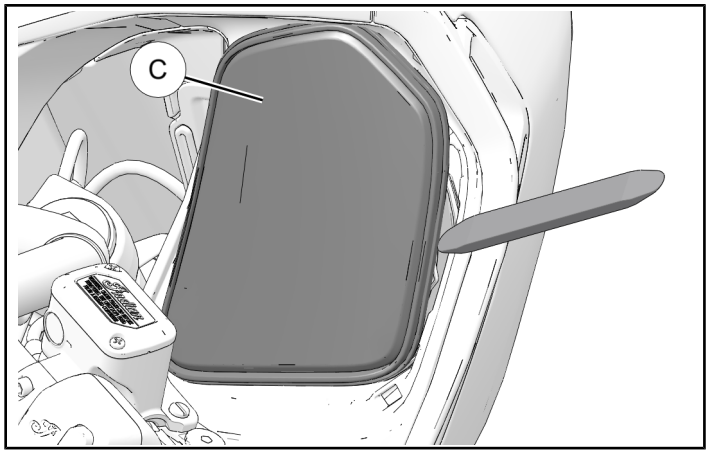

3. Gently pry along top edge of headlight bezel Ⓓ with non-marring pry tool. Pull headlight bezel Ⓓ down and out. Carefully set aside.

TIP
Use Special Tool: Non-marring Pry Tool, P/N 5456907 (or equivalent)

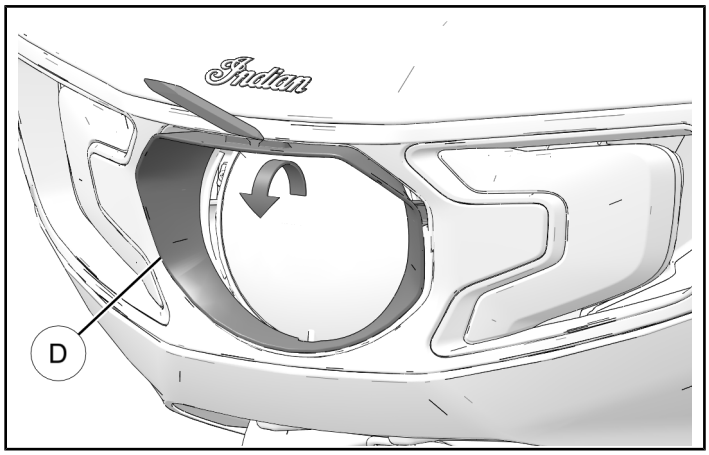

4. Remove and retain three screws Ⓔ from around headlight bezel as shown.

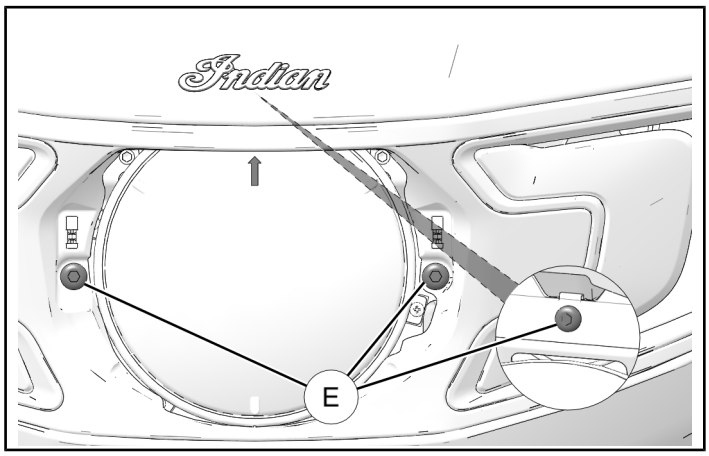

5. Remove and retain two screws Ⓕ from top outer corner of storage openings and two screws Ⓕ from top center of speaker openings.

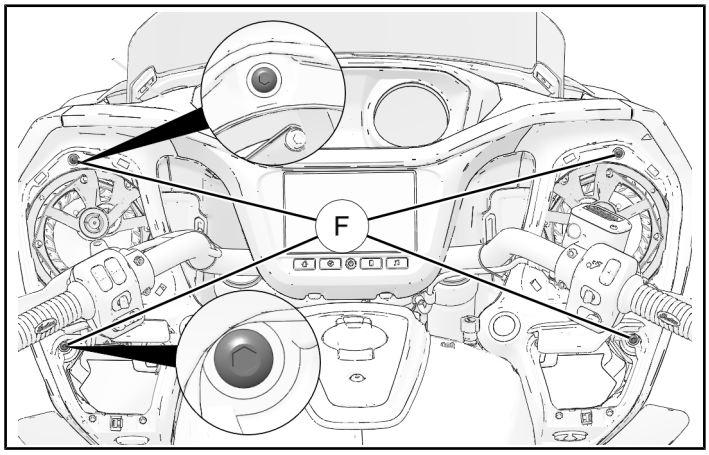

6. Remove and retain one screw Ⓖ from under edge of each side of fairing as shown.

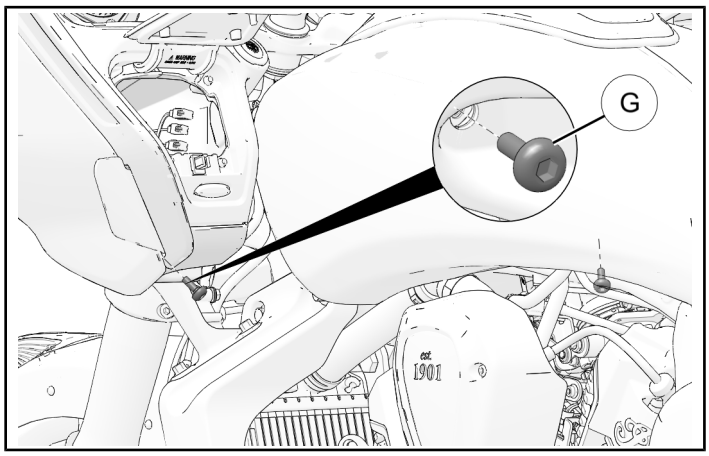

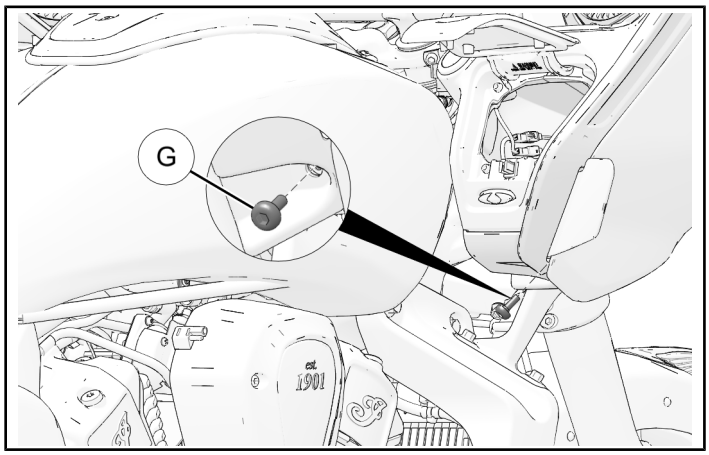

7. Pull fairing outward at top to disengage. Pull fairing out a short distance and disconnect headlight and turn signal wire connectors.

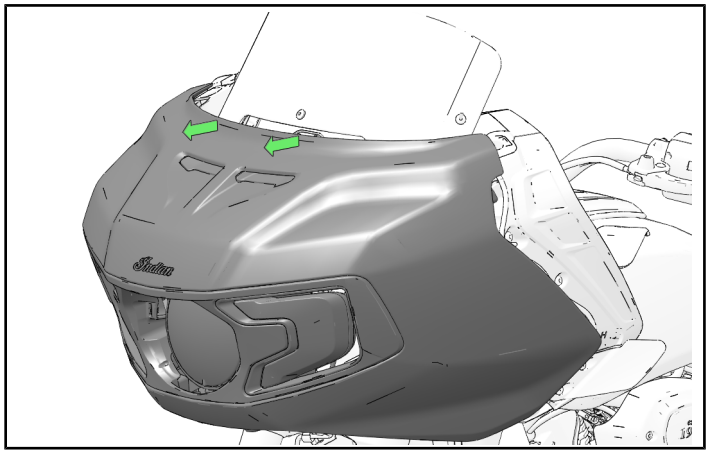

8. Disconnect connectors for headlight Ⓗ and turn signals Ⓙ.

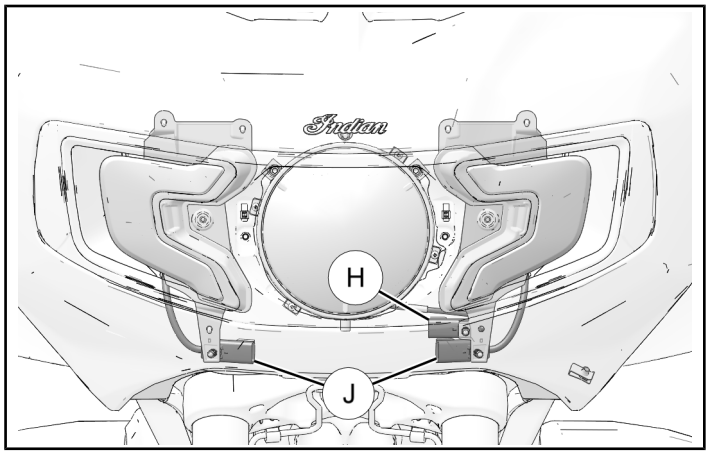

9. Carefully pull outer fairing off motorcycle and set aside.

HEATED GRIP SWITCH INSTALLATION

1. Identify switch blank behind left-hand storage cover.

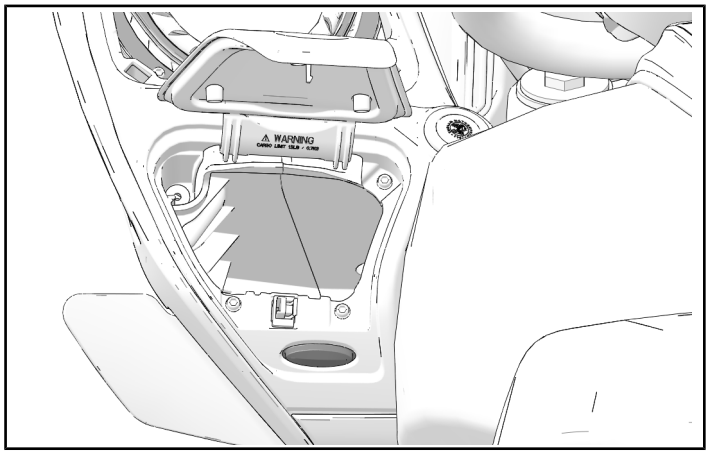

2. Access switch blank from front of fairing.

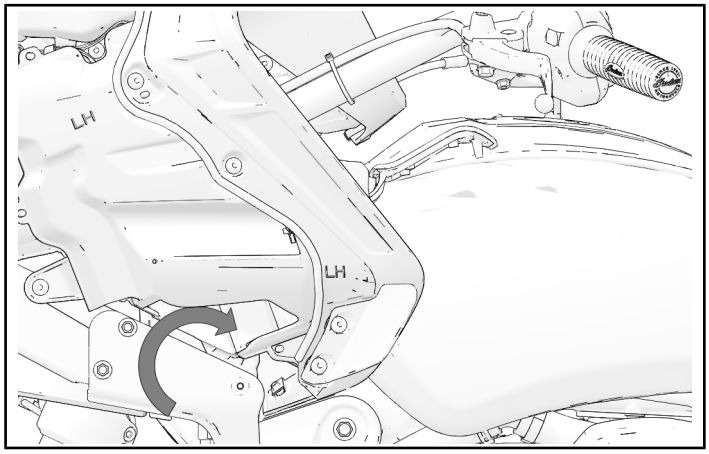

3. Remove and retain two switch fasteners. Remove and discard switch blank.

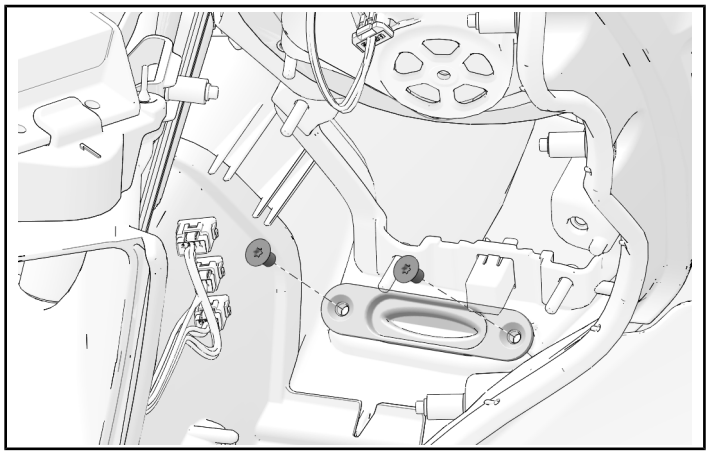

4. Install new switch and secure with two retained switch fasteners.

TORQUE
Switch Fasteners: **20 in-lbs (2 N·m)**

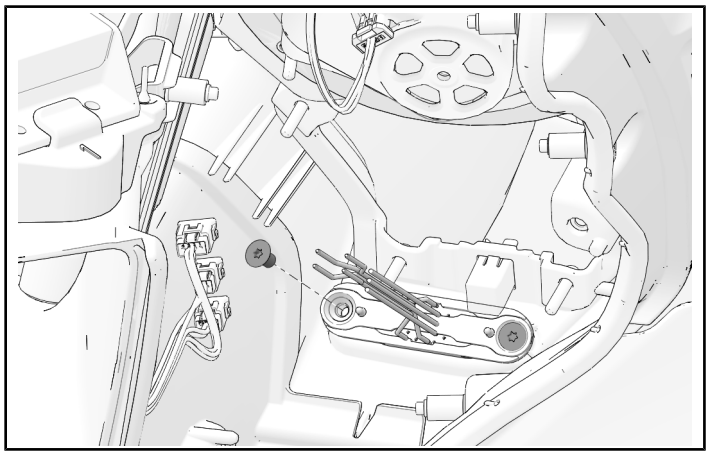

5. Join switch connectors to chassis harness wires, located on the side of storage compartment.

VEHICLE REASSEMBLY

GENERAL

1. Heated Grips Kit only:
   Verify heated grips switch operates properly before reinstalling fairing.

CHASSIS-MOUNTED FAIRING ONLY

OUTER FAIRING INSTALLATION

1. Set outer fairing in place and connect turn signal Ⓙ and headlight Ⓗ wire connectors.

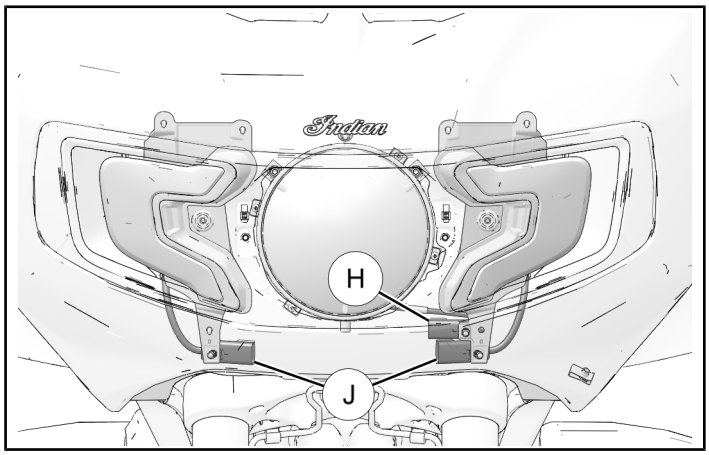

2. Press fairing into place and at top edge to engage locating pins.

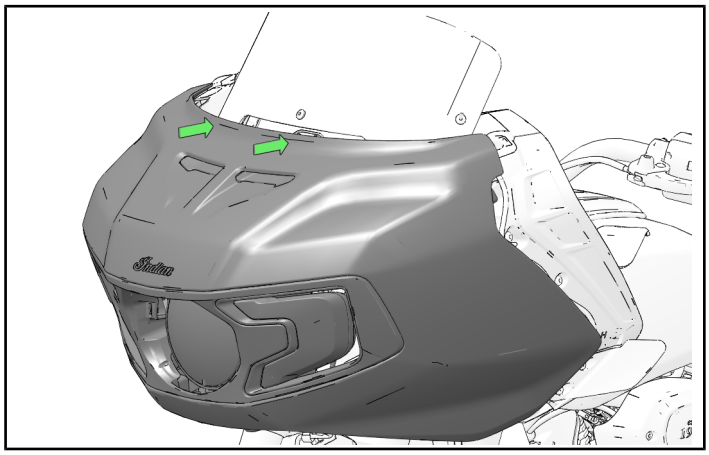

3. Loosely install one screw Ⓖ into hole under edge of each side of fairing as shown. **DO NOT** torque fastener at this time.

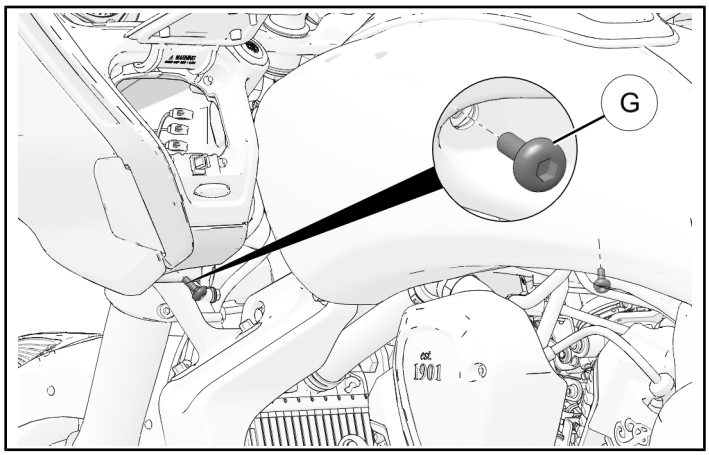

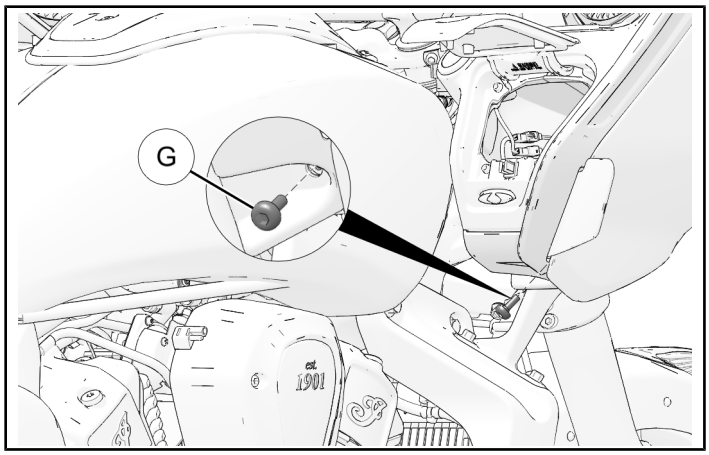

4. Loosely install two screws Ⓕ into top outer corner of storage openings and two screws Ⓕ into top center of speaker openings. **DO NOT** torque fasteners at this time.

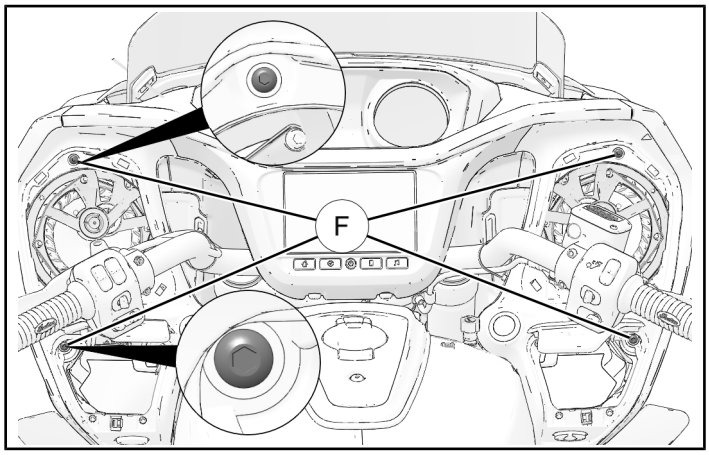

5. Loosely install three screws Ⓔ around headlight bezel as shown.

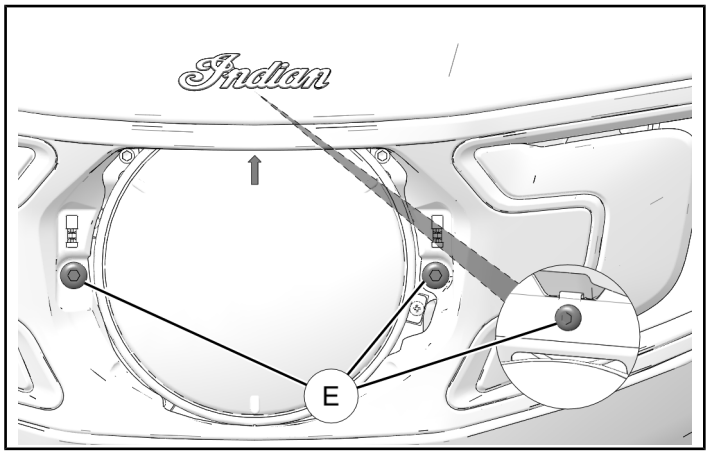

6. Torque all outer fairing screws to specification.

TORQUE
Outer Fairing Screws Ⓔ, Ⓕ, Ⓖ: **36 in-lbs (4 N·m)**

7. Carefully reinstall headlight bezel Ⓓ into outer fairing opening starting with bottom tab. Press down on bezel (or use non-marring tool as shown) to insert upper tabs without damaging finish.

TIP
Use Special Tool: Non-marring Pry Tool, P/N 5456907 (or equivalent)

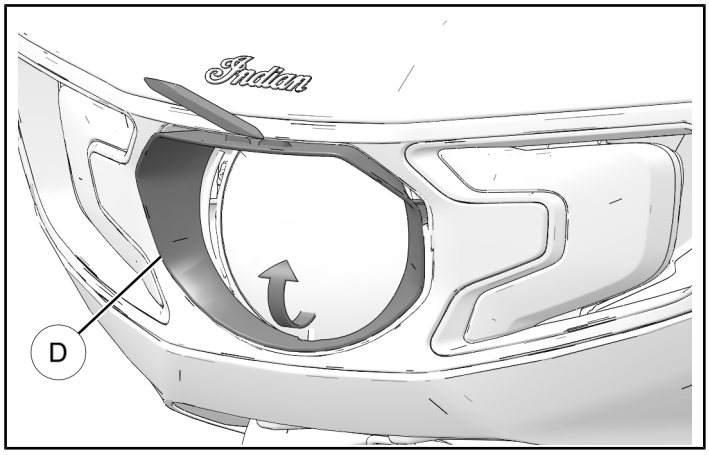

8. Reinstall fairing speaker grills Ⓒ.
9. Reinsert storage liners Ⓑ.

FEEDBACK FORM

A feedback form has been created for the installer to provide any comments, questions or concerns about the installation instructions. The form is viewable on mobile devices by scanning the QR code or by clicking **HERE** if viewing on a PC.