POWERBAND™ AUDIO 5 ¼" AND QUICK RELEASE TRUNK AMPLIFIED SPEAKER KIT

P/N 2883926, 2883927

APPLICATION

Verify accessory fitment at **www.indianmotorcycle.com**.

FITMENT TABLE

Model	Upgrade	Kit Required
Chieftain® and Chieftain® Classic	Fairing Speakers	Powerband Audio™ 5¼ " Amplified Speaker Kit PN 2883926
	Trunk Speakers (with Accessory Trunk Kit PN 2884046-XXX)	Powerband Audio™ Quick Release Trunk Amplified Speaker Kit PN 2883927
Roadmaster®	Fairing Speakers	Powerband Audio™ 5¼ " Amplified Speaker Kit PN 2883926
	Trunk Speakers	Powerband Audio™ 5¼ " Amplified Speaker Kit PN 2883926

BEFORE YOU BEGIN

Read these instructions and check to be sure all parts and tools are accounted for. Please retain these installation instructions for future reference and parts ordering information.

REQUIRED SOLD SEPARATELY

The Indian Powerband™ Audio 5 ¼ " Amplified Speaker Kit and Indian Powerband™ Audio Quick Release Trunk Amplified Speaker Kit contains parts for installation of the Indian Powerband™ Audio 5 ¼ " Amplified Speaker Kit and Indian Powerband™ Audio Quick Release Trunk Amplified Speaker Kit only. For installation of trunk speakers, prior installation of the following additional kits is also required (sold separately):

- Quick Release Trunk Kit, PN 2884046-XXX
- Trunk Installation Kit, PN 2884007

NOTE
XXX = Indian Motorcycle® color code (For example: 266 = Black)

KIT CONTENTS

Kit PN 2883926

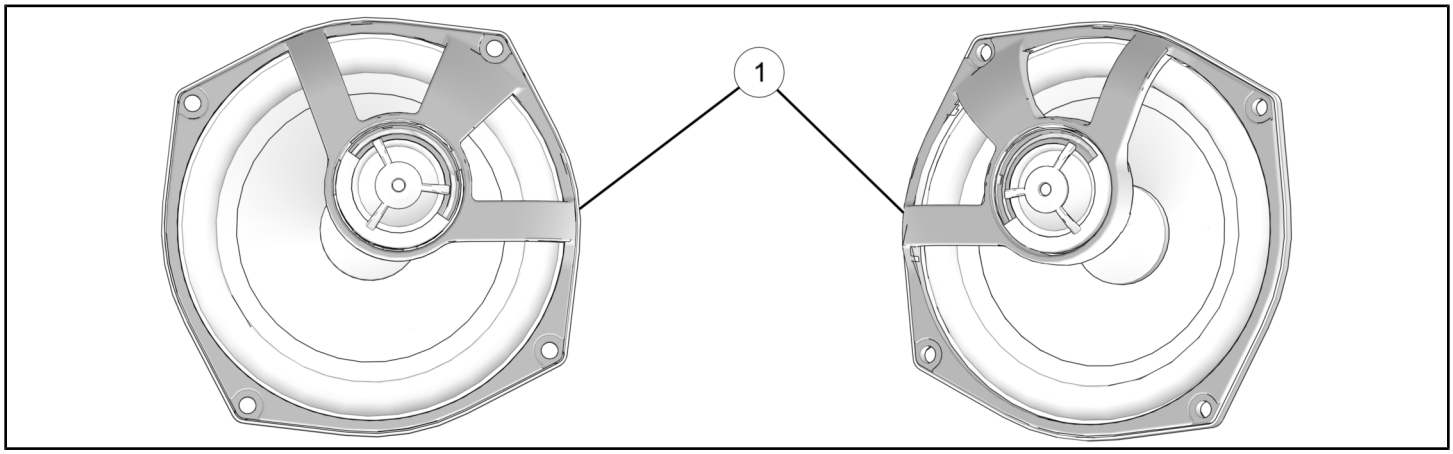

REF	QTY	PART DESCRIPTION	P/N AVAILABLE SEPARATELY
1	2	Speaker, 5.25 in.	4017740
	1	Instructions	9929141

Kit PN 2883927

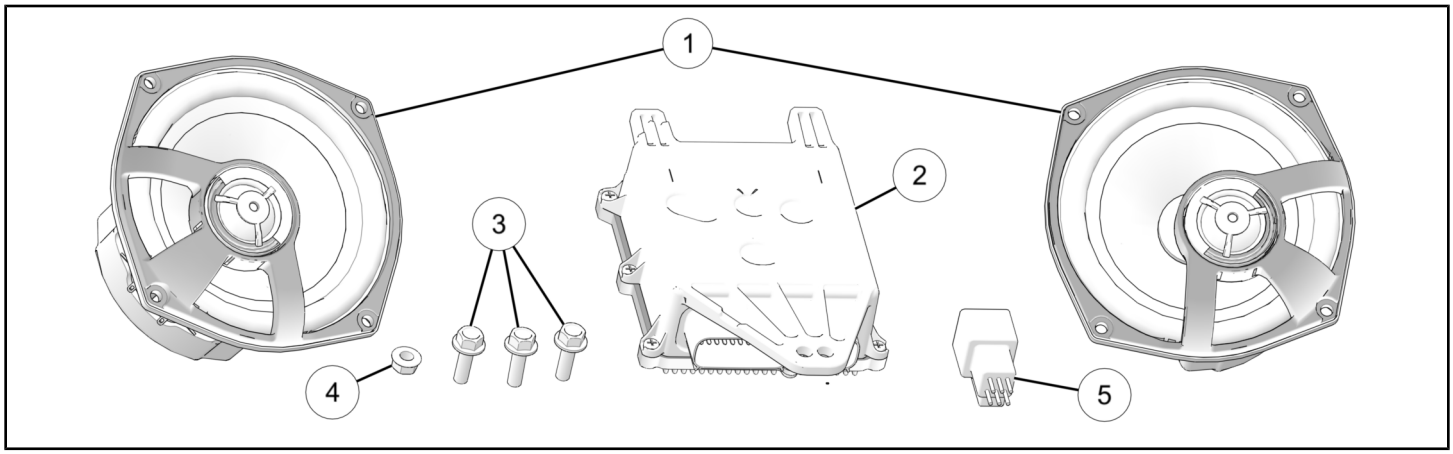

REF	QTY	PART DESCRIPTION	P/N AVAILABLE SEPARATELY
1	2	Speaker, 5.25 in.	4017740
2	1	Module, Power Supply, DSP, 4 Channel	4017736
3	3	Screw, Hex Flange Head, M6 X 1.0 X 20	7518141
4	1	Nut, Hex Flange, M6 X 1.0	7710495
5	1	Assembly, Connector Cap, 6-pin	4018421
	1	Instructions	9929141

TOOLS REQUIRED

- Safety Glasses
- Socket Set, Hex Bit, Metric
- Socket Set, Metric
- Socket Set, Torx® Bit
- Torque Wrench

IMPORTANT

Your Indian Motorcycle® Powerband™ Audio 5 ¼" and Quick Release Trunk Amplified Speaker Kit is exclusively designed for your vehicle. Please read the installation instructions thoroughly before beginning. Installation is easier if the vehicle is clean and free of debris. For your safety, and to ensure a satisfactory installation, perform all installation steps correctly in the sequence shown.

INSTALLATION INSTRUCTIONS

VEHICLE PREPARATION

GENERAL

1. Turn key or ignition switch to "OFF" position and remove key. If equipped with keyless fob, remove fob from proximity of vehicle.
2. Ensure motorcycle is parked on a flat surface, kickstand is fully extended, and vehicle is stable prior to installation.

ACCESSORY INSTALLATION

FAIRING SPEAKER INSTALLATION

1. Remove and retain two screws Ⓐ and grill cover Ⓑ from fairing.

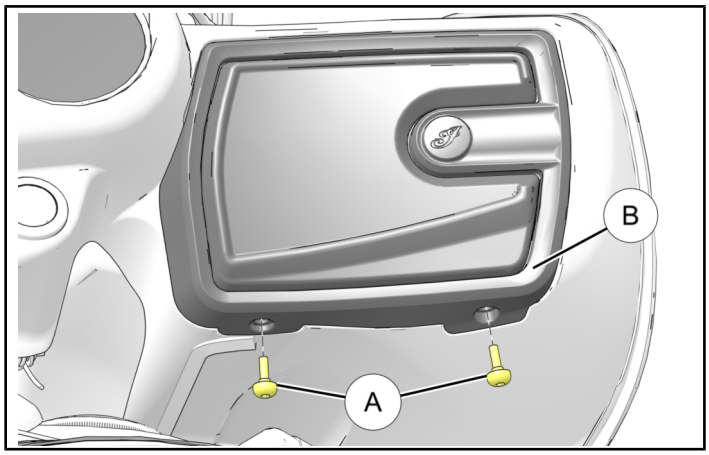

2. Remove and retain four screws Ⓒ from fairing speaker Ⓓ.

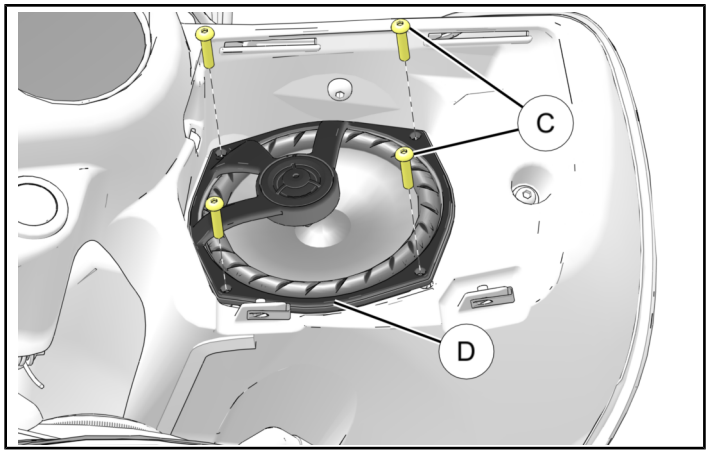

3. Lift out speaker Ⓓ and unplug electrical connector Ⓔ. Discard speaker.

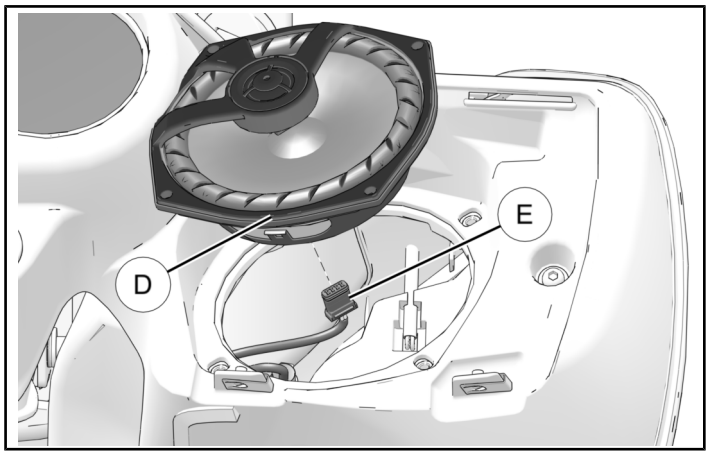

4. Connect electrical connector Ⓔ to new speaker ①. Install speaker ① into fairing and secure with four retained screws Ⓒ. Torque screws Ⓒ to specification.

TORQUE
15 in. lbs. (1.7 Nm)

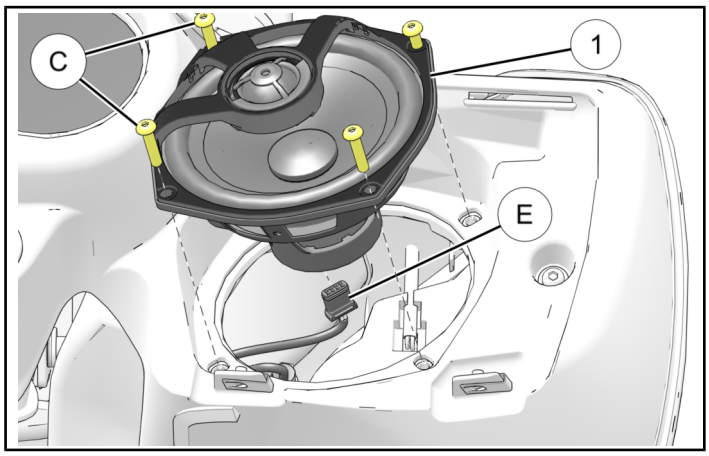

5. Reinstall retained grill cover Ⓑ and secure with two retained screws Ⓐ. Torque screws to specification.

TORQUE
36 in. lbs. (4 Nm)

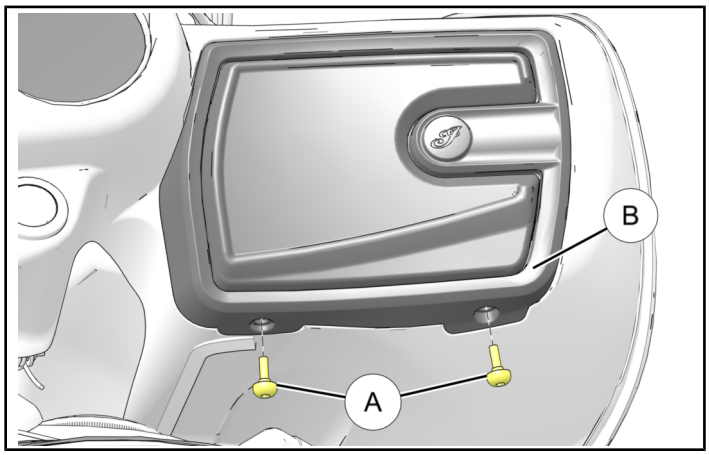

6. Repeat this section for opposite side speaker.

TRUNK SPEAKER INSTALLATION

1. Open trunk lid. Empty contents of trunk. Remove and set aside trunk liners Ⓐ and Ⓑ.

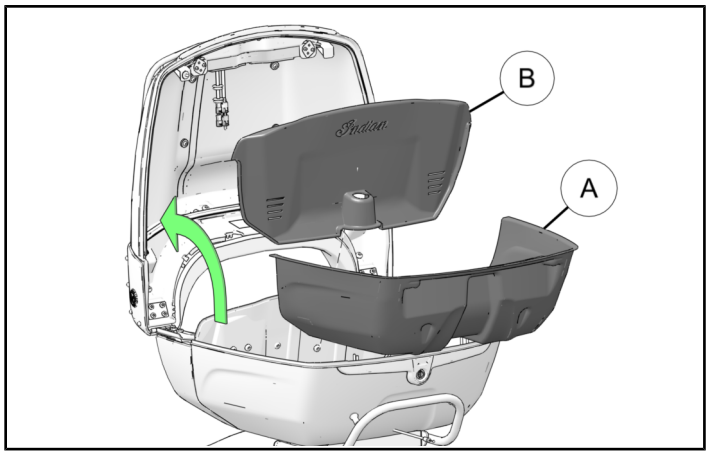

2. Remove and retain three screws Ⓒ and lower backrest piece Ⓓ.

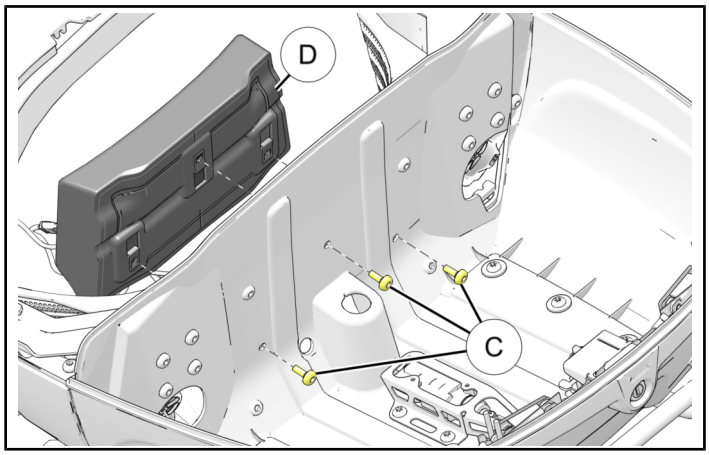

3. Remove and retain six screws Ⓔ from Left Ⓕ and right Ⓖ speaker grills.

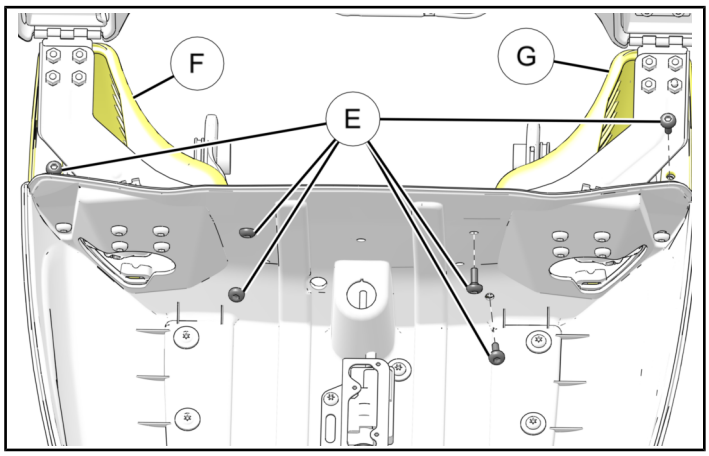

4. Carefully remove left Ⓕ and right Ⓖ speaker grills and set aside.

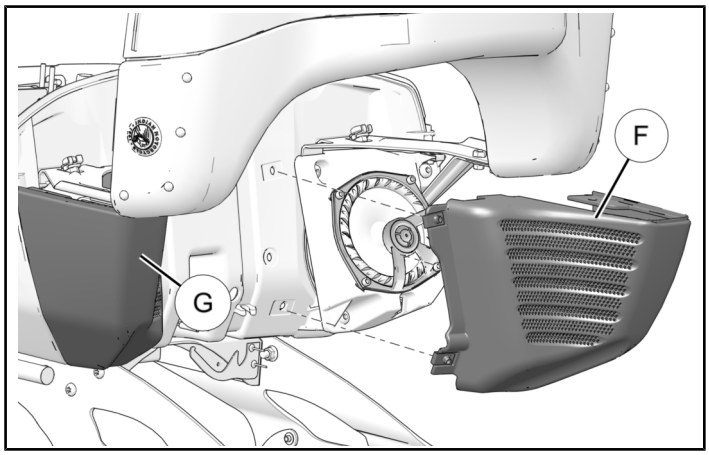

5. Follow corresponding step for your motorcycle.
   - **Roadmaster® and speaker equipped trunks:**
     a. Remove and retain four screws Ⓗ from each speaker Ⓙ and remove speakers. Carefully unplug speaker connectors.

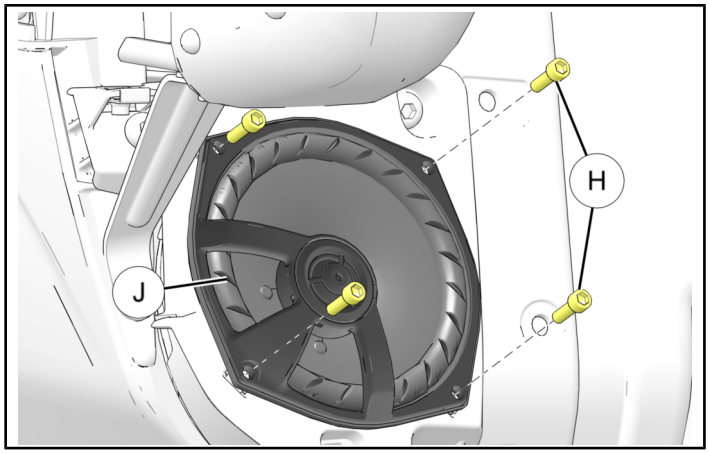

     b. Connect electrical connectors to new speakers ① and set in place. Secure speakers using retained screws Ⓗ. Torque fasteners to specification.

TORQUE
Socket head screw Ⓗ: 15 in. lbs. (1.7 Nm)

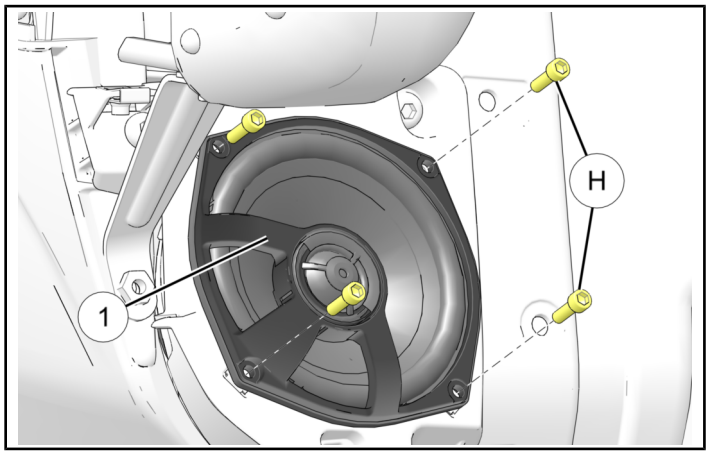

   - **Accessory trunks (no speakers installed):**
     a. Remove and retain 4 screws Ⓚ from each cover Ⓛ and remove covers Ⓛ and rubber seals Ⓜ.

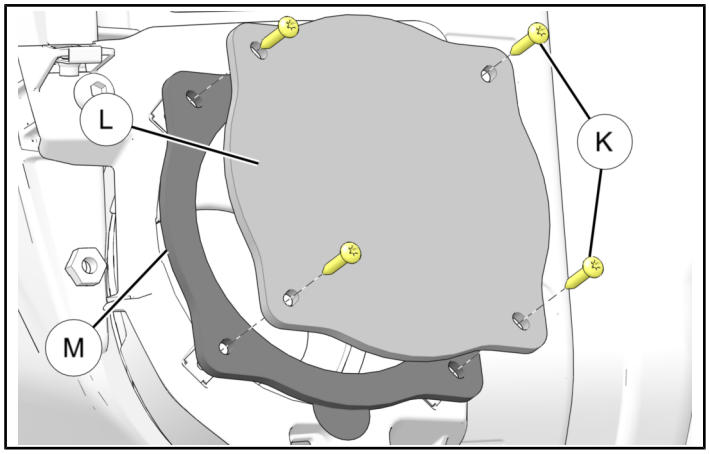

     b. Connect electrical connectors to new speakers ① and set in place. Secure speakers using retained screws Ⓚ. Torque fasteners to specification.

TORQUE
Torx® head screw Ⓚ: 15 in. lbs. (1.7 Nm)

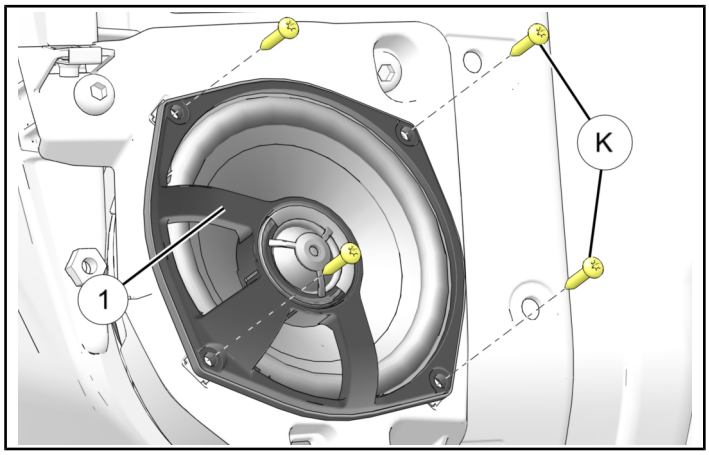

6. Reinstall speaker grills Ⓕ and Ⓖ and secure with six retained fasteners Ⓔ. Torque fasteners to specification.

TORQUE
36 in. lbs. (4 Nm)

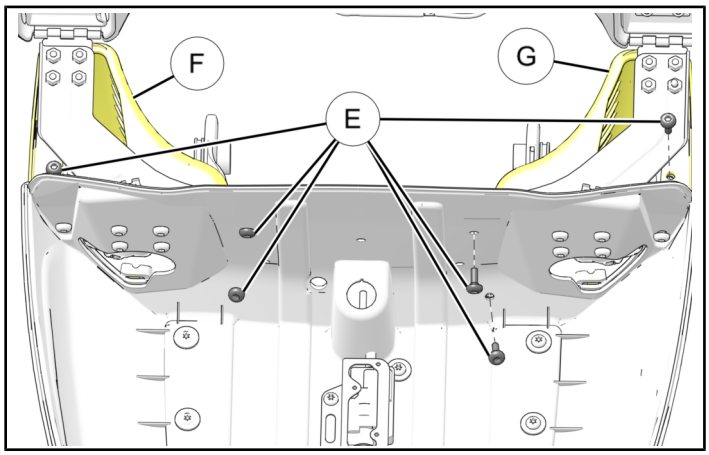

7. Reinstall lower backrest piece Ⓓ with three retained screws Ⓒ. Torque screws to specification.

TORQUE
36 in. lbs. (4 Nm)

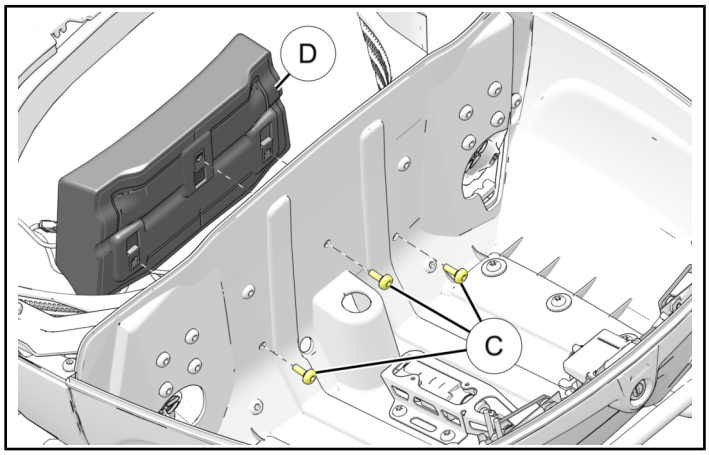

8. Reinstall trunk liner Ⓑ and then trunk liner Ⓐ.

POWER SUPPLY MODULE INSTALLATION

THIS SECTION APPLIES TO MOTORCYCLES WITH THE ACCESSORY TRUNK KIT ONLY

REMOVE HEADLIGHT ASSEMBLY

1. Follow corresponding step for your motorcycle.
   - **Chieftain®**
     - Using a small non-marring tool, pry down on headlight trim Ⓐ to release tab, pull headlight trim Ⓐ and rubber surround Ⓑ from fairing and carefully set aside.

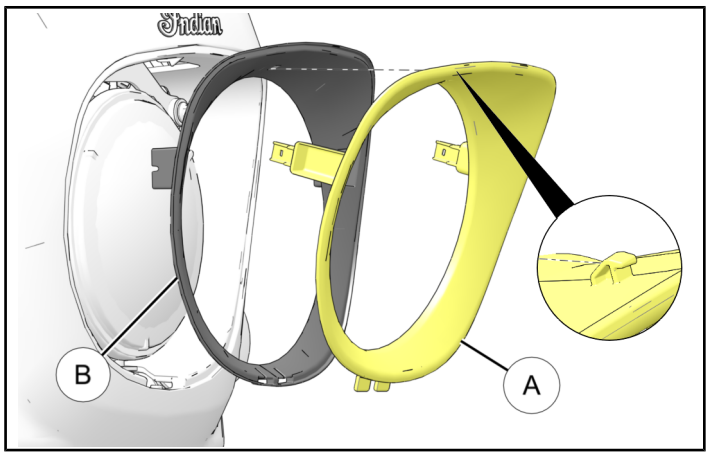

   - **Chieftain® Classic**
     - Remove and retain two screws Ⓐ and carefully pull trim piece Ⓑ from fairing.

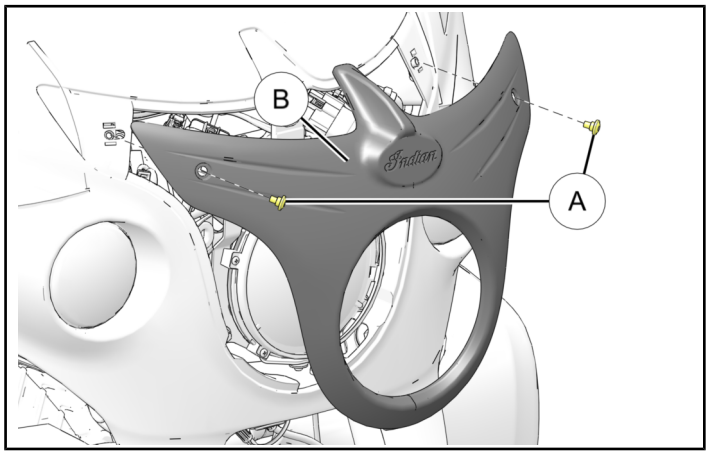

2. Remove and retain four screws Ⓒ and washers Ⓓ from headlight assembly frame Ⓔ and remove headlight assembly. Disconnect headlight connector Ⓕ from headlight. Carefully set assembly aside.

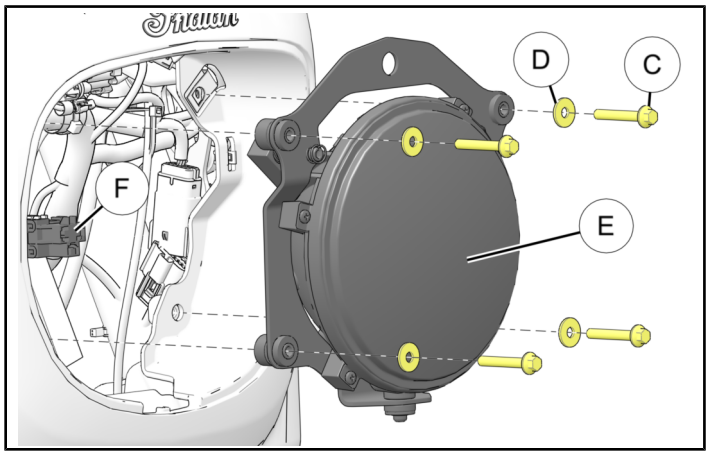

INSTALL POWER SUPPLY MODULE

NOTE

Fairing and Trunk Audio are powered by power supply in RH side (from rider's perspective) of fairing bracket. LH side of bracket is reserved for saddlebag audio power supply.

1. Remove and discard bolt Ⓐ. Pull bracket Ⓑ and harness Ⓒ away to access amplifier mount.

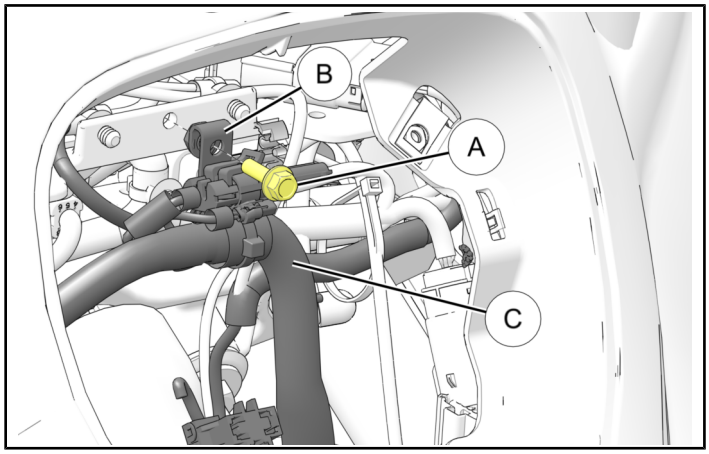

2. Unplug electrical connectors and remove and retain bolt Ⓓ and nut Ⓔ from power supply module Ⓕ.

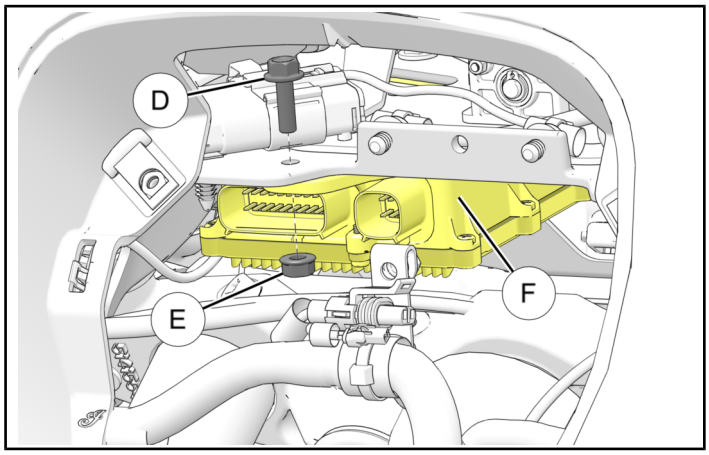

3. Remove power supply module Ⓕ from RH fairing bracket.

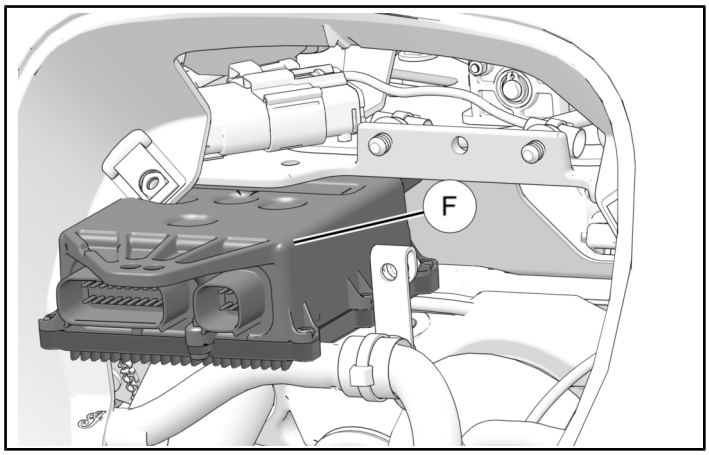

4. Install new power control module ② into RH fairing bracket in place of removed module. Ensure two tabs slide into bracket as shown. Plug in two connectors into module. Press connectors onto module until a "click" is heard.

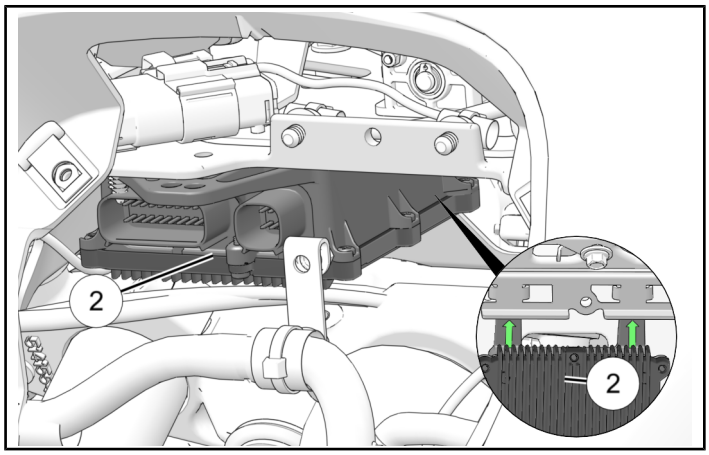

5. Secure new power supply module ② with new screw ③ and nut ④. Torque fastener to specification.

TORQUE
36 in. lbs. (4 Nm)

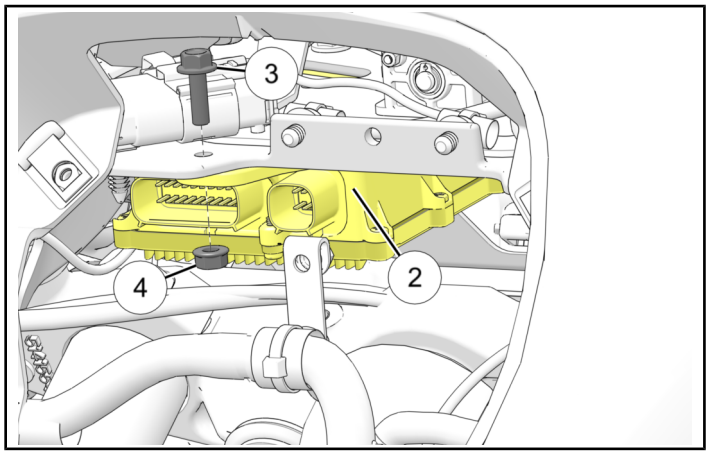

6. Ensure all electrical connectors are plugged into power supply module. Pull on connectors to ensure they are locked in place.
7. Reinstall bracket Ⓑ and harness Ⓒ, secure with new screw ③. Torque screw to specification.

TORQUE
36 in. lbs. (4 Nm)

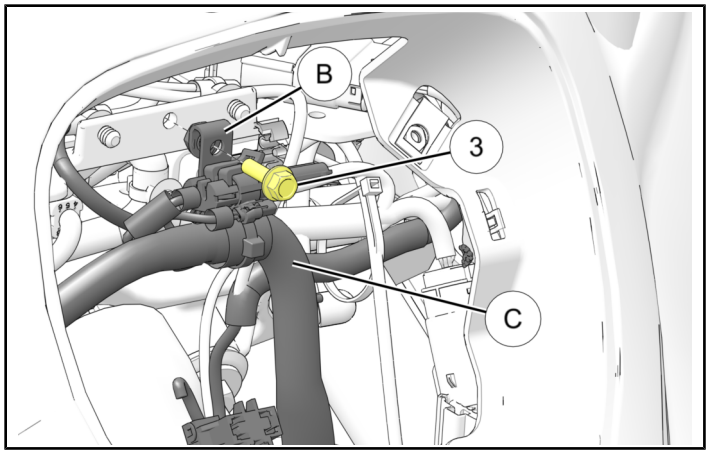

VEHICLE REASSEMBLY

INSTALL HEADLIGHT ASSEMBLY

1. Plug headlight connector Ⓕ into headlight and install headlight into place. Secure headlight assembly frame Ⓔ with four retained screws Ⓒ and washers Ⓓ . Torque screws to specification.

TORQUE
75 in. lbs. (8.5 Nm)

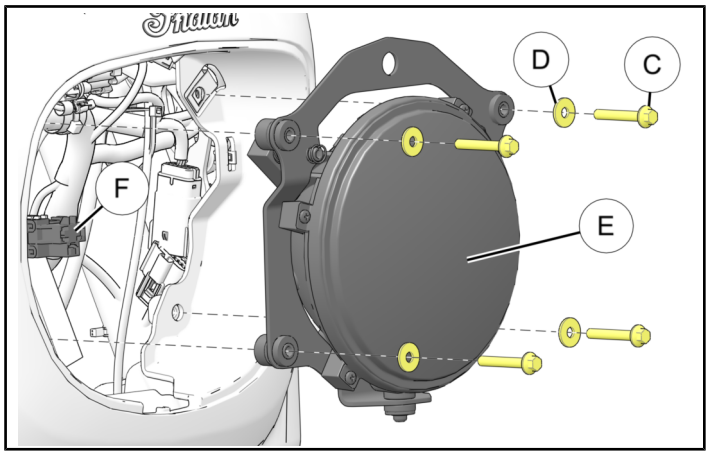

2. Follow corresponding step for your motorcycle.

- **Chieftain®**

  - Install rubber surround Ⓑ and headlight trim Ⓐ into fairing and carefully press into place.

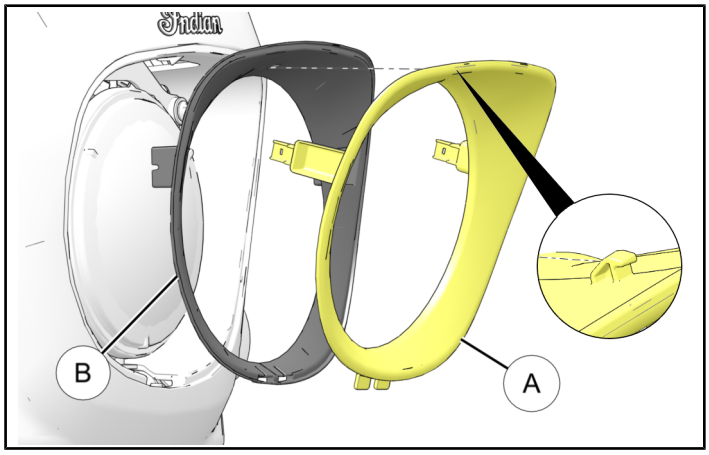

- **Chieftain® Classic**

  - Install trim piece Ⓑ into fairing and secure with two retained screws Ⓐ. Torque screws to specification.

TORQUE
36 in. lbs. (4 Nm)

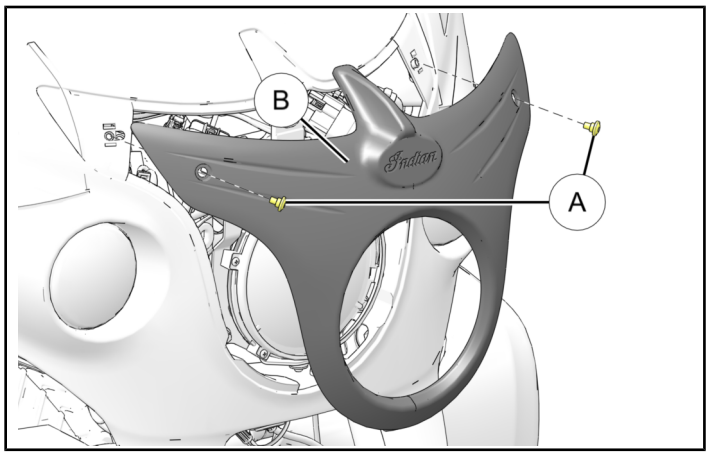

FEEDBACK FORM

A feedback form has been created for the installer to provide any comments, questions or concerns about the installation instructions. The form is viewable on mobile devices by scanning the QR code or by clicking **HERE** if viewing on a PC.

FEEDBACK FORM