STRONGHOLD MOUNT KIT

P/N 2882272

APPLICATION

Verify accessory fitment at Polaris.com.

BEFORE YOU BEGIN

Read these instructions and check to be sure all parts and tools are accounted for. Please retain these installation instructions for future reference and parts ordering information.

KIT CONTENTS

This Kit includes:

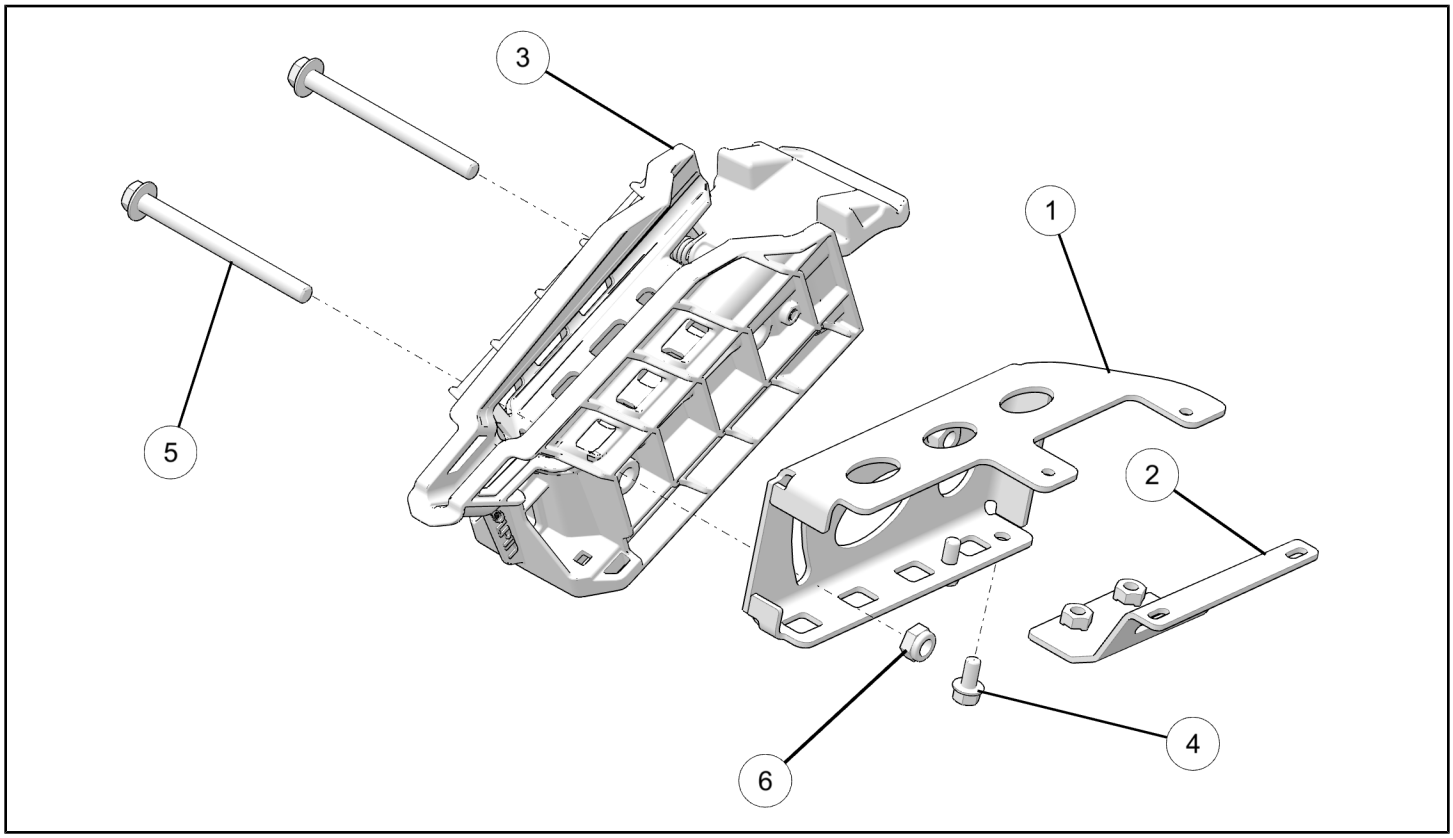

REF	QTY	PART DESCRIPTION	PART NUMBER
1	1	Upper Gun Mount Bracket	-
2	1	Lower Gun Mount Bracket	-
3	1	Quick Latch Bracket	-
4*	2	Screw - M8 X 1.25 X 16, HXFL	-
5*	2	Screw - M10 X 1.5 X 115, HXFL	-
6*	1	Nut - M10 X 1.5	-
	1	Instructions	9927507

Items marked (*) are included in Hardware Kit PN 2206503.

TOOLS REQUIRED

- Safety Glasses
- Metric Socket and Ratchet Set

IMPORTANT

Your STRONGHOLD MOUNT KIT is exclusively designed for your vehicle. Please read the installation instructions thoroughly before beginning. Installation is easier if the vehicle is clean and free of debris. For your safety, and to ensure a satisfactory installation, perform all installation steps correctly in the sequence shown.

ASSEMBLY TIME

Approximately 15 minutes

INSTALLATION INSTRUCTIONS

1. Shift vehicle transmission into “PARK”. Turn key to “OFF” position and remove from vehicle.
2. Remove two existing screws (A) and nuts (B) from rear rack (C) of vehicle. Retain hardware for reuse.

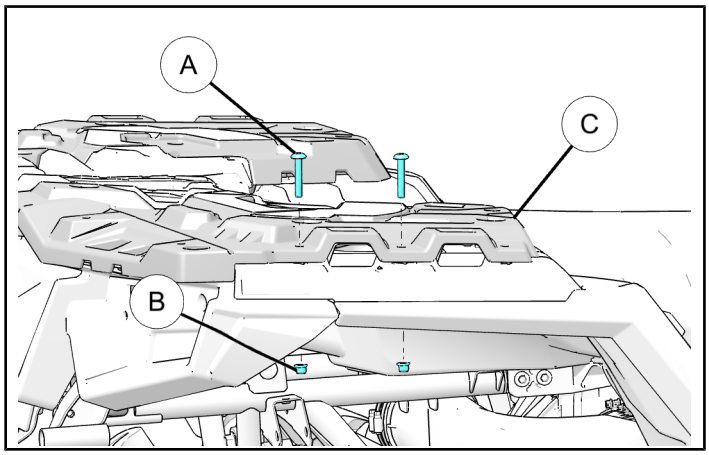

3. Loosely install upper gun mount bracket ① to the rear rack (C) using retained screws (A) as shown. Do not install nuts (B) at this time.

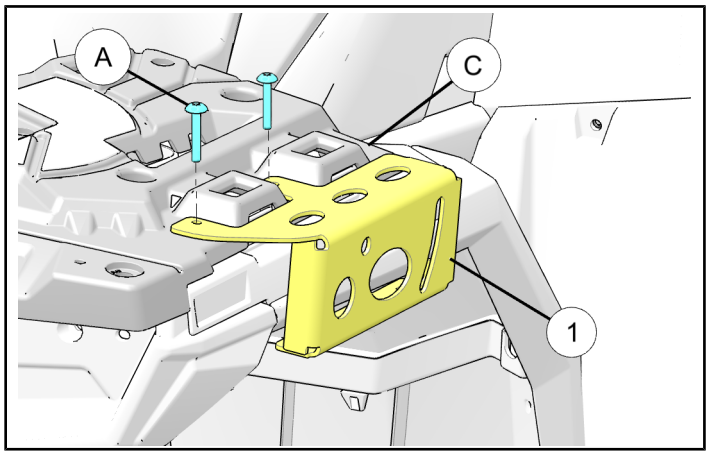

4. Install lower gun mount bracket ② onto the upper gun mount bracket ① by aligning holes and installing two screws ④ as shown. Do not tighten hardware at this time.

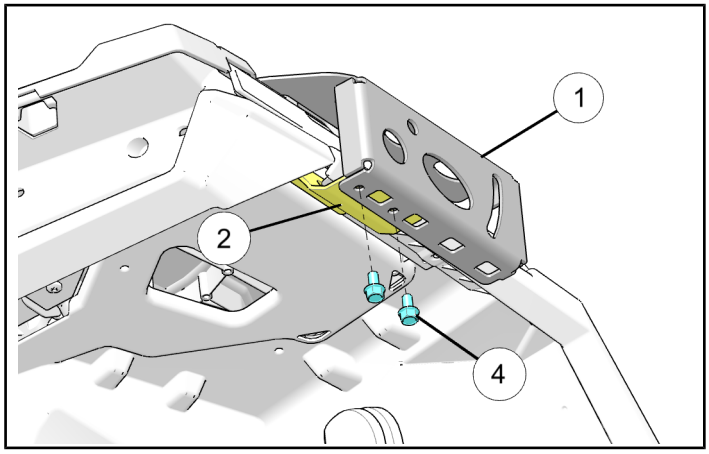

5. Insert previously installed screws (A) through lower gun mount bracket holes and install retained nuts (B). Tighten screws (A) and ④ to below specification.

TORQUE
8 ft. lbs. (10.8 Nm)

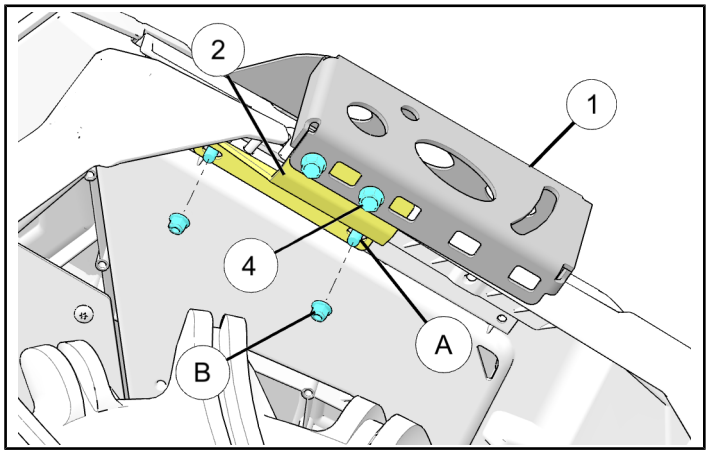

6. Install quick latch bracket ③ onto upper gun mount bracket ① using two screws ⑤. Install nut ⑥ on the front screw as shown. Torque screws ⑤ to below specification.

TORQUE
10 ft. lbs. (13.5 Nm)

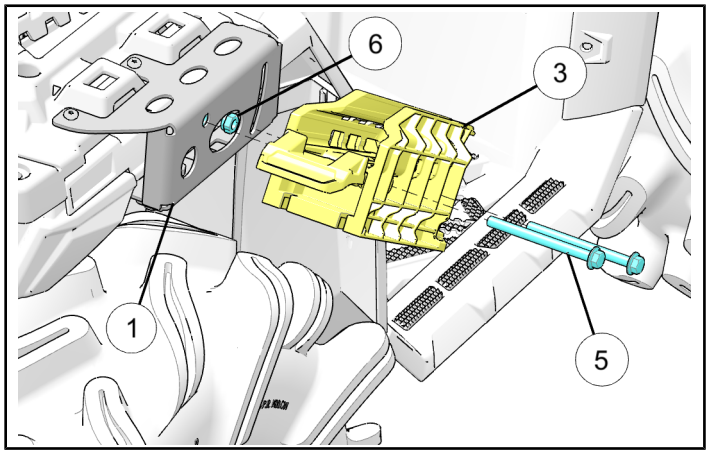

7. Gun mount kit with the gun boot (D) installed shown below.

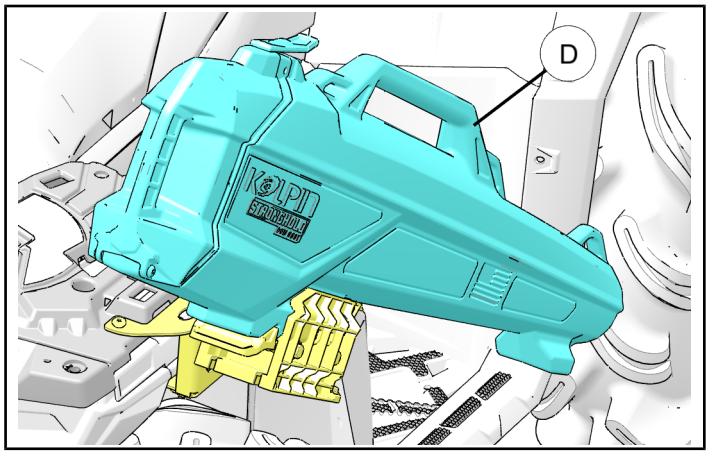

COMPATIBILITY

Stronghold mount kit is compatible with following accessory kits.

- Rear Rack Extenders Kit (PN 2882023 and PN 2882025).
- Rear Storage Box Kit (PN 2882026).